Bobcat®

Parts Manual

ZS4000

9994002(AU) KAW FX651V 20.5HP 48”SD

S/N 999400200070 & Above

9994003(AU) KAW FT730V EFI 26HP 52”SD

S/N 999400300070 & Above

9994004(AU) KAW FT730V EFI 26HP 61”SD

S/N 999400400070 & Above

4178822enUS (06-20) (0)

Printed in U.S.A.

©2020 Bobcat Company. All rights reserved.

GENERAL INFORMATION

Before ordering parts, ALWAYS provide dealer with your product model number and complete serial number information. Before ordering parts, verify correct part numbers and / or serial numbers with your dealer. When using the machine serial number, use the complete number.

The number shown in the quantity column in this manual is the number of parts needed for the illustration on the page. For some parts, an "x" is shown in the quantity column. This "x" indicates that the quantity to be ordered / used is "As Needed".

When references to LH (Left Hand) and RH (Right Hand) are used in this manual, they apply when an operator is situated in the operator's seat in the operating position.

www.bobcat.com

Mower Serial Number _____

Engine Serial Number _____

NOTES:

_____

_____

_____

YOUR BOBCAT DEALER: _____

ADDRESS: _____

PHONE: _____

Example:

Bobcat

Model	Serial Number
9997010	999701000050

Bobcat Company
West Fargo, ND 58078 USA

MODEL NUMBER: This number appears on sales literature, technical manuals and price lists.

SERIAL NUMBER: This number appears only on your unit. It contains the model number followed consecutively by the serial number. Use this number when ordering parts or seeking warranty information. Located under seat plate on frame of unit.

TABLE OF CONTENTS	FIGURES	PAGE
ENGINE DECK ASSEMBLY	FIGURE 1	2, 3
RIDER PLATFORM ASSEMBLY	FIGURE 2	4, 5
WHEEL & TRANSAXLE ASSEMBLY	FIGURE 3	6, 7
FUEL TANK & BATTERY ASSEMBLY	FIGURE 4	8, 9
PARKING BRAKE ASSEMBLY	FIGURE 5	10, 11
UPPER WIRE HARNESS	FIGURE 6	12, 13
NON EFI 48" LOWER WIRE HARNESS	FIGURE 7	14, 15
EFI 52" & 61" LOWER WIRE HARNESS	FIGURE 8	16, 17
TOWER ASSEMBLY	FIGURE 9	18, 19
RIDER PAD & FENDER ASSEMBLY	FIGURE 10	20, 21
CONTROLS ASSEMBLY	FIGURE 11	22, 23
REAR DECK LIFT ASSEMBLY	FIGURE 12	24, 25
FRONT DECK LIFT ASSEMBLY	FIGURE 13	26, 27
CASTER & BELT COVER ASSEMBLY	FIGURE 14	28, 29
48" SIDE DECK ASSEMBLY	FIGURE 15	30, 31
52" SIDE DECK ASSEMBLY	FIGURE 16	32, 33
61" SIDE DECK ASSEMBLY	FIGURE 17	34, 35
CHUTE, BAFFLES & EDGES	FIGURE 18	36, 37

REGULAR MAINTENANCE ITEMS

BATTERY
4171099
An AGM battery charger is required (4171973)

TRANSAXLE FILTER
4142045-06

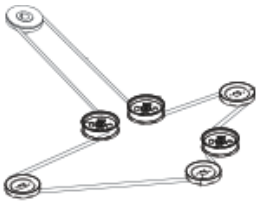

DECK BELT

9994002	4171864
9994003	4170484
9994004	4170952

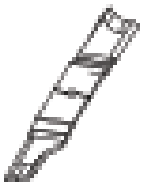

DECK BLADE

9994002	112111-01
9994003	112111-02
9994004	112111-03

DRIVE BELT
2721642

ENGINE OIL
7354875 SAE 10W30 CK-4/SN (1 qt)

TRANSAXLE OIL
7354882 - 2 gallon
SAE 15w40 CE/SG (2.0 qt per transaxle)

NOTE: Contact your Bobcat dealer for engine and parts replacements.

NOTE: Always verify Part Numbers with your Bobcat dealer.

ACCESSORIES

ECO Plate Kit
Magnetic Light & 12V Kit
Mulch KitsNo-flat Caster Wheels
Side Grass-catcher KitsStriping Kit
Weight Kit

ENGINE DECK ASSY

FIGURE 1

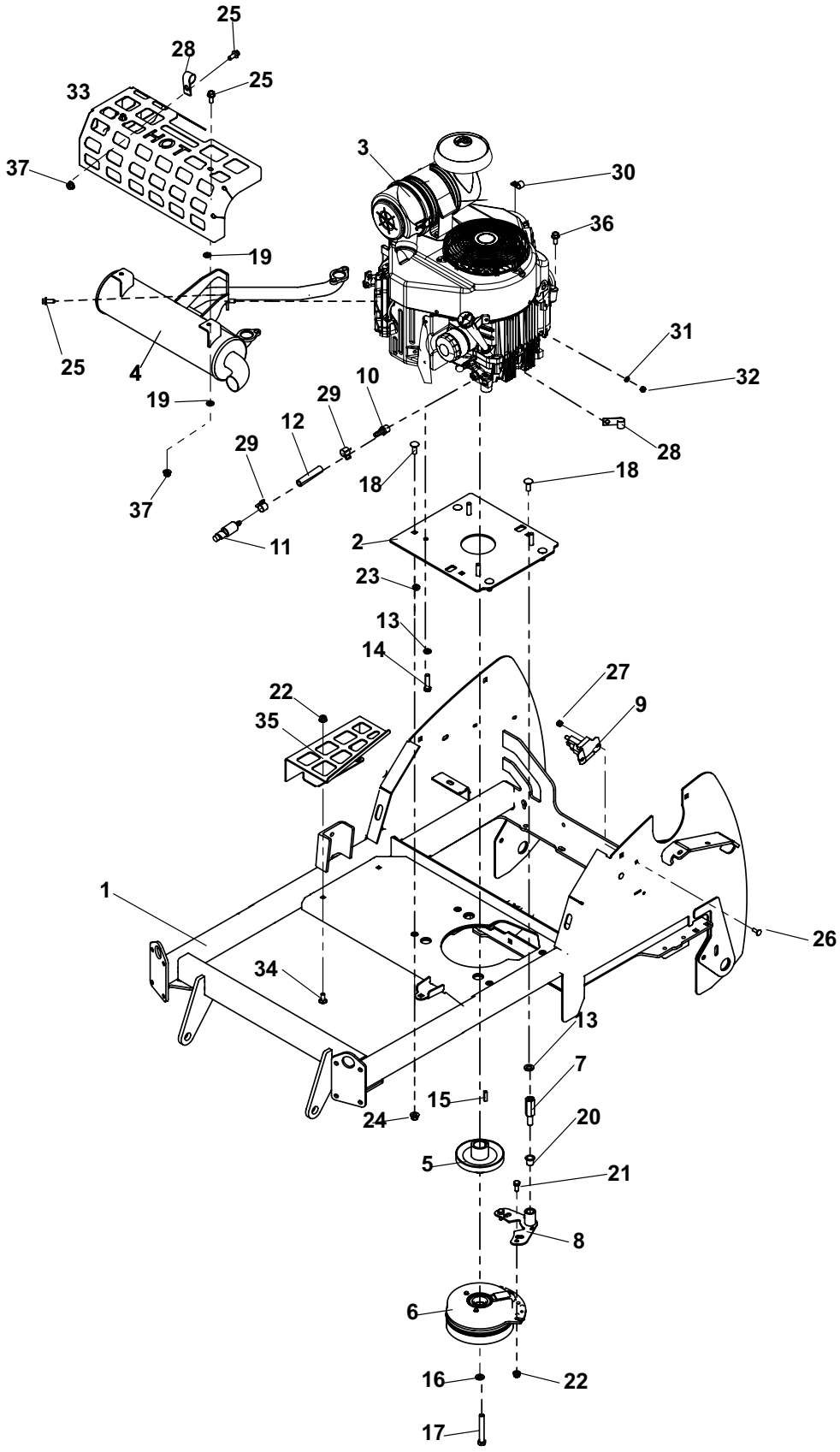

ENGINE DECK ASSY

FIGURE 1

ITEM	PART NO.	DESCRIPTION	QTY
1	4178728	S-FRAME W/ LABELS	1
2	4172751.46	PLATE-ENGINE	1
3	4164366	ENGINE-22HP KAW FX USED ON 48" NON EFI ONLY	1
	4176514	ENGINE-FT730V EFI KAW USED ON 52" & 61" EFI ONLY	1
4	4170548-04	MUFFLER-ENGINE	1
*	4170548-02	MANIFOLD-MUFFLER NON EFI ENGINES ONLY	1
*	4170548-05	MUFFLER ENGINE EFI EFI ENGINES ONLY	1
*	4170548-03	CLAMP-MUFFLER	1
5	4170170	PULLEY-4.5 INCH	1
6	4171141	CLUTCH-ELECTRIC	1
7	4169106	PIN-CLUTCH, TALL	1
8	4173452.7	WLDMT-CLUTCH STOP	1
9	38665	SOLENOID USED ONLY ON 9994002	1
10	4164252-001	FITTING-3/8NPT TO 3/8	1
11	4164251	DRAIN VALVE	1
12	69053-05	HOSE-HYD 3/8 ID X 55 (17IN)	1
13	64006-03	LOCKWSHR-3/8 HELICAL	5
14	64123-16	BLT-HEX 3/8-16X1-1/4	4
15	64164-12	KEY-1/4X1 SQ	1
16	64006-06	LOCKWSHR-7/16 HELICAL	1
17	64123-155	BLT-HEX 7/16-20 X 3	1
18	64018-44	BLT-CRG 3/8-16X1 NECK)	5
19	4171826	WSHR-5/16 TEF	4
20	38304-03	BEARING-FLANGED PLAS	1
21	64123-54	BLT-HEX 5/16-18 X .75	4
22	64268-02	NUT-FL NY LOCK 5/16-18	6
23	64001-6	NUT-HEX JAM 3/8-16	4
24	64268-03	NUT-FL NY LOCK 3/8-16	4
25	64263-007	BLT-FLG HD M8-1.25 X 20 QTY 6 ON NON EFI ENGINES QTY 4 ON EFI ENGINES	
26	64018-2	BLT-CRG 1/4-20X3/4 USED ONLY ON 9994002	2
27	64229-01	NUT-NYLON LOCK 1/4-20 USED ONLY ON 9994002	2
28	48412-01	CLIP-CABLE 3/4 J X 10.32 QTY 2 ON NON EFI ENGINES QTY 1 ON EFI ENGINES	
29	88042-03	CLAMP, HOSE 5/8	2
30	48228A	CABLE CLIP-INSULATED	1
31	64006-01	LOCKWSHR-1/4 HELICAL USED ON 9994002	1
	64006-02	LOCKWSHR-5/16 HELICAL USED ON 9994003 , 9994004	1
32	64025-01	1/4-20 HEX NUT USED ON 9994002	1
	64207-01	NUT-HEX M8-1.25 USED ON 9994003 , 9994004	1
33	4176549.46	GUARD-MUFFLER NON EFI ENGINES	1
	4176550.46	GUARD-MUFFLER EFI EFI ENGINES ONLY	1
34	64018-51	BLT-CRG 5/16-18 X 3/4	2
35	4171542.46	GUARD-EXHAUST MNFLD	1
36	64266-02	NUT-FL CRWN LCK M8-1.25 QTY 3 ON NON EFI ENGINES QTY 2 ON EFI ENGINES	

*** NOT ILLUSTRATED**

RIDER PLATFORM ASSY

FIGURE 2

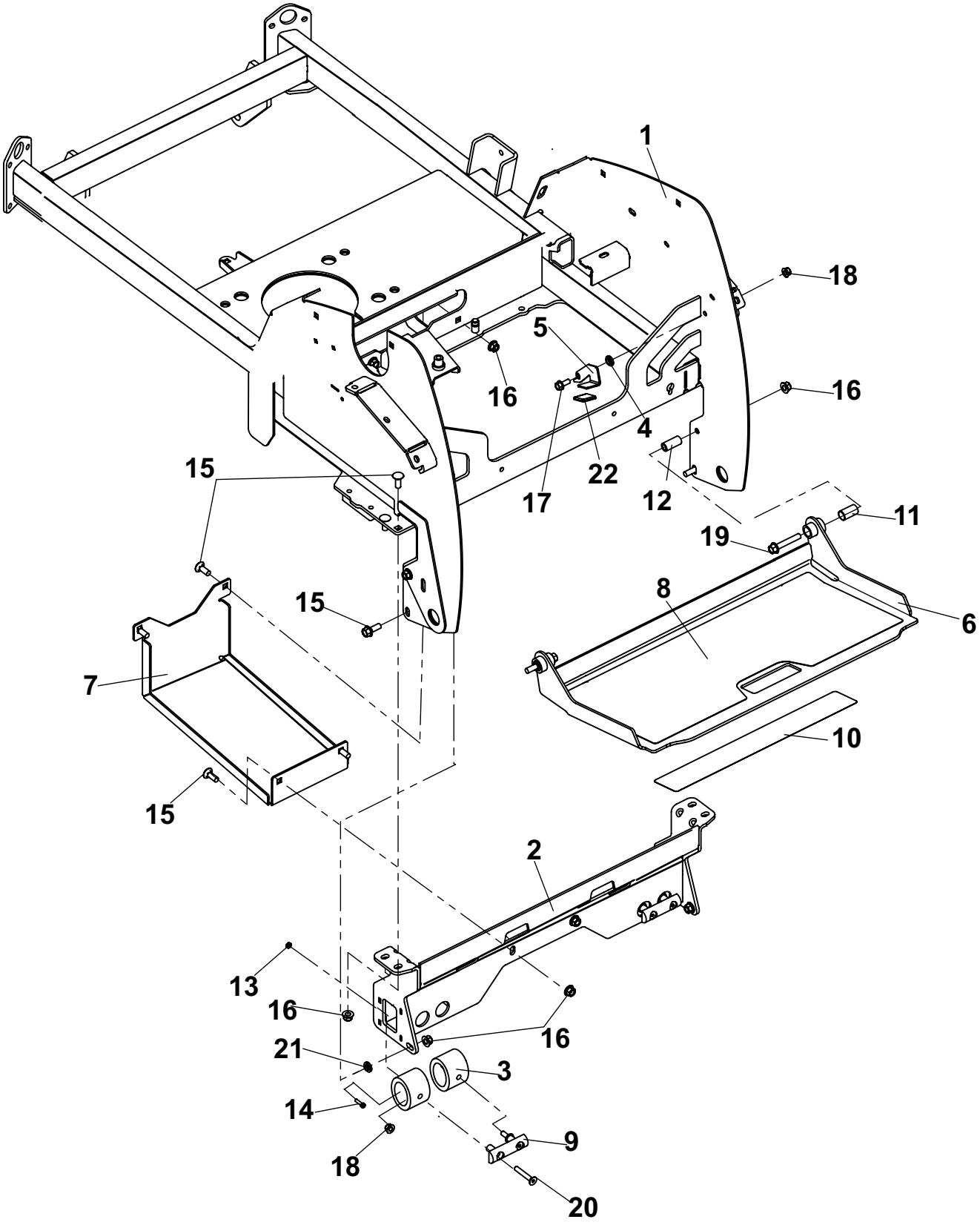

RIDER PLATFORM ASSY

FIGURE 2

ITEM	PART NO.	DESCRIPTION	QTY
1	4178728	S-FRAME W/ LABELS	1
2	4171132.46	WLDMT-FTPLTE MOUNT	1
3	4170585	BUMPER-RADIAL	4
4	4170388	SPACER-FTPLATE LATCH	1
5	4170383.46	BRKT-LATCH, FOOTPLATE	1
6	4178731	S-FOOTPLATE w/ LABELS	1
7	4171113.46	PLATE-TANK SKID	1
8	4170670	MAT-FOOTPLATE	1
9	4171672	BUMPER-FOOTPLATE	2
10	4178637	LABEL-BOBCAT 15 X 3	1
11	4166324-04	BEARING-SLEEVE	2
12	4171254	SPACER-.625X11GAX1.375	2
13	64229-10	NUT-NYLON LOCK 10-24	4
14	64152-49	SCREW-SLT HH 10-24X3/4	4
15	64018-44	BLT-CRG 3/8-16X1	10
16	64268-03	NUT-FL NYLON LOCK 3/8-16	12
17	64262-006	BLT-FLG HD 5/16-18 X 3/4	1
18	64268-02	NUT-FL NYLON LOCK 5/16-18	5
19	64262-027	BLT-FLG HD 3/8-16 X 2-1/4	2
20	64272-03	FLT-HEX SCR 5/16-18X2-1/2	4
21	64163-31	WSHR 25/64X1X12	2
22	4171365	CAP-LATCH FOOTPLATE	1

***NOT ILLUSTRATED**

ITEM	PART NO.	DESCRIPTION	QTY

WHEEL & TRANSAXLE ASSY

FIGURE 3

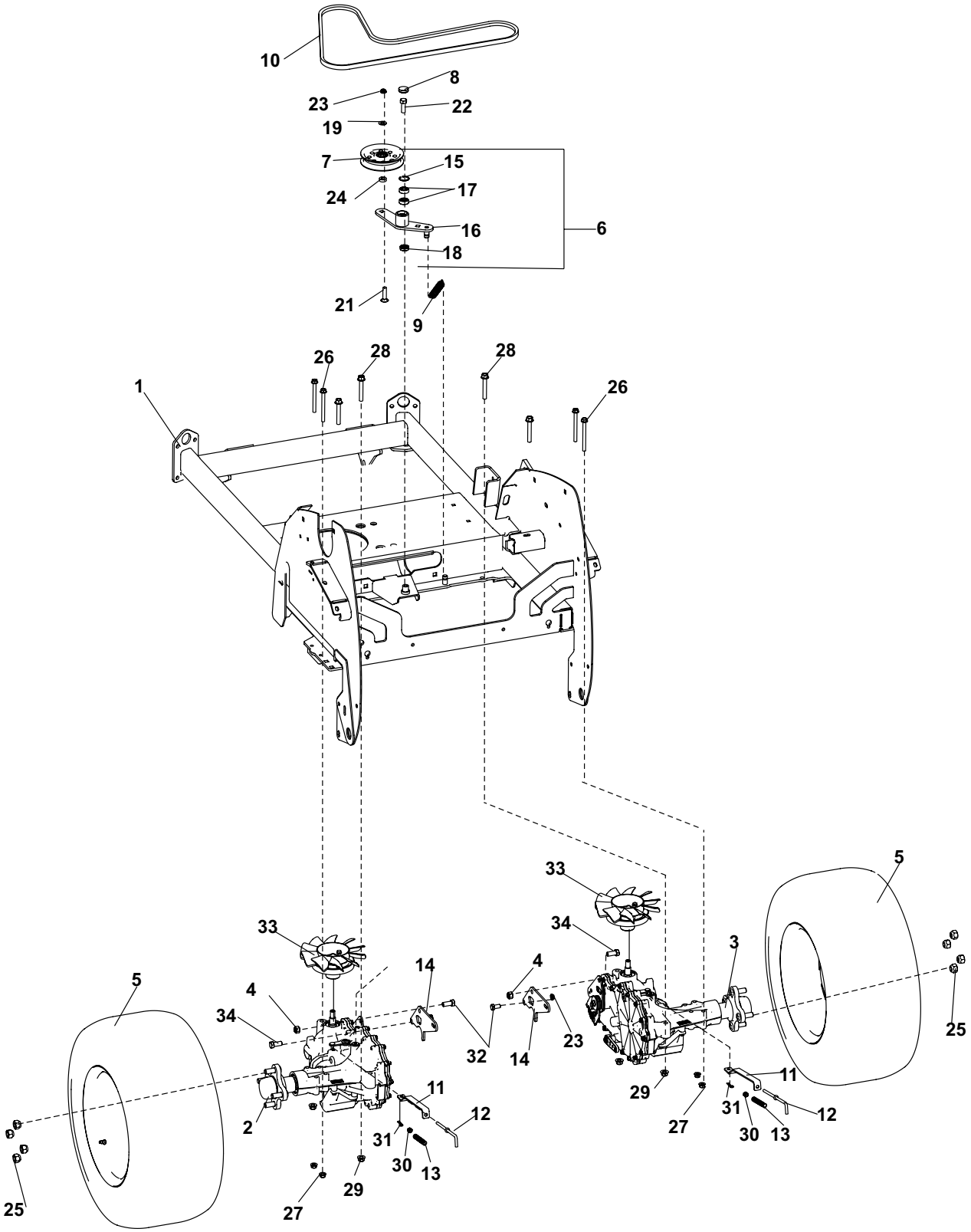

WHEEL & TRANSAXLE ASSY

FIGURE 3

ITEM	PART NO.	DESCRIPTION	QTY
1	4178728	S-FRAME W/ LABELS	1
2	4178834	S-ASSYTRANSAXLE-LH	1
	(INCLUDES ITEM 33)		
3	4178835	S-ASSYTRANSAXLE-RH	1
	(INCLUDES ITEM 33)		
4	64229-04	NUT-NYLON LOCK 7/16-14	22
5	4179538	WHEEL-ASSY,23X10.50-12	2
	4171868-01	TIRE-23X10.5-12 OTR	
	4179538-01	RIM-12X8.5 ORANGE	
		USED ON 9994003 & 9994004	
	4179539	WHEEL-ASSY, 23X8.50-12	2
	4179539-01	RIM-12.00X7.00	
	4174236-01	TIRE-23 X 8.5-12	
		USED ON 9994002	
6	4178692	ASSY-IDLER ARM	1
	(INCLUDES ITEMS 38-41)		
7	2308000	PULLEY-IDLER 4.00 EOD	1
8	4128002	CAP-26 X 7 END	1
9	2188131	SPRING, EXT	1
10	4170486	BELT-TRANSAXLE DRIVE	1
11	4148698.46	LINK-DUMP VALVE	2
12	4148697	ROD-PULL FREEWHEEL	2
13	2720977	SPRING-COMPRESSION	2
14	4173339.46	PLATE-TRANSAXLE	2
15	64144-40	SNAP RING-26MM INTERNAL	1
16	4170274.46	WLDMT-IDLER ARM	1
17	4128004	BEARING-BALL 10 X 26 X 8	2
18	4127999	SEAL-16 X 24 X 7	1
19	64163-61	WSHR .81X.406X16GA	1
20*	4142045-06	FILTER-TRANSAXLE	2
21	64018-49	BLT-CRG 3/8-16 X 1-1/2	1
22	64270-01	BLT-HEX M10-1.5x30	1
23	64151-34	NUT-HEX LOCK, 3/8-16 JAM	3
24	33148-01	SPACER-0.379X0.750X0.25	1
25	64187-03	NUT-WHEEL 1/2-20	8
26	64139-30	BLT-WLFS 5/16-18 X 3-1/2	4
27	64268-02	NUT-FL NYLON LOCK 5/16-18	4
28	64262-025	BLT-FLG HD 3/8-16 X 2-1/2 LG	4
29	64268-03	NUT-FL NYLON LOCK 3/8-16	4
30	64229-01	NUT-NYLON LOCK 1/4-20	2
31	64168-2	COTTER-HAIRPIN .08 X 1.19	2
32	64123-15	BLT-HEX 3/8-16X3/4	2
33	4171150	KIT-FAN/PULLEY TRNSXL	2
34	64123-38	BLT-HEX 7/16-14X1	2

***NOT ILLUSTRATED**

FUEL TANK & BATTERY ASSY

FIGURE 4

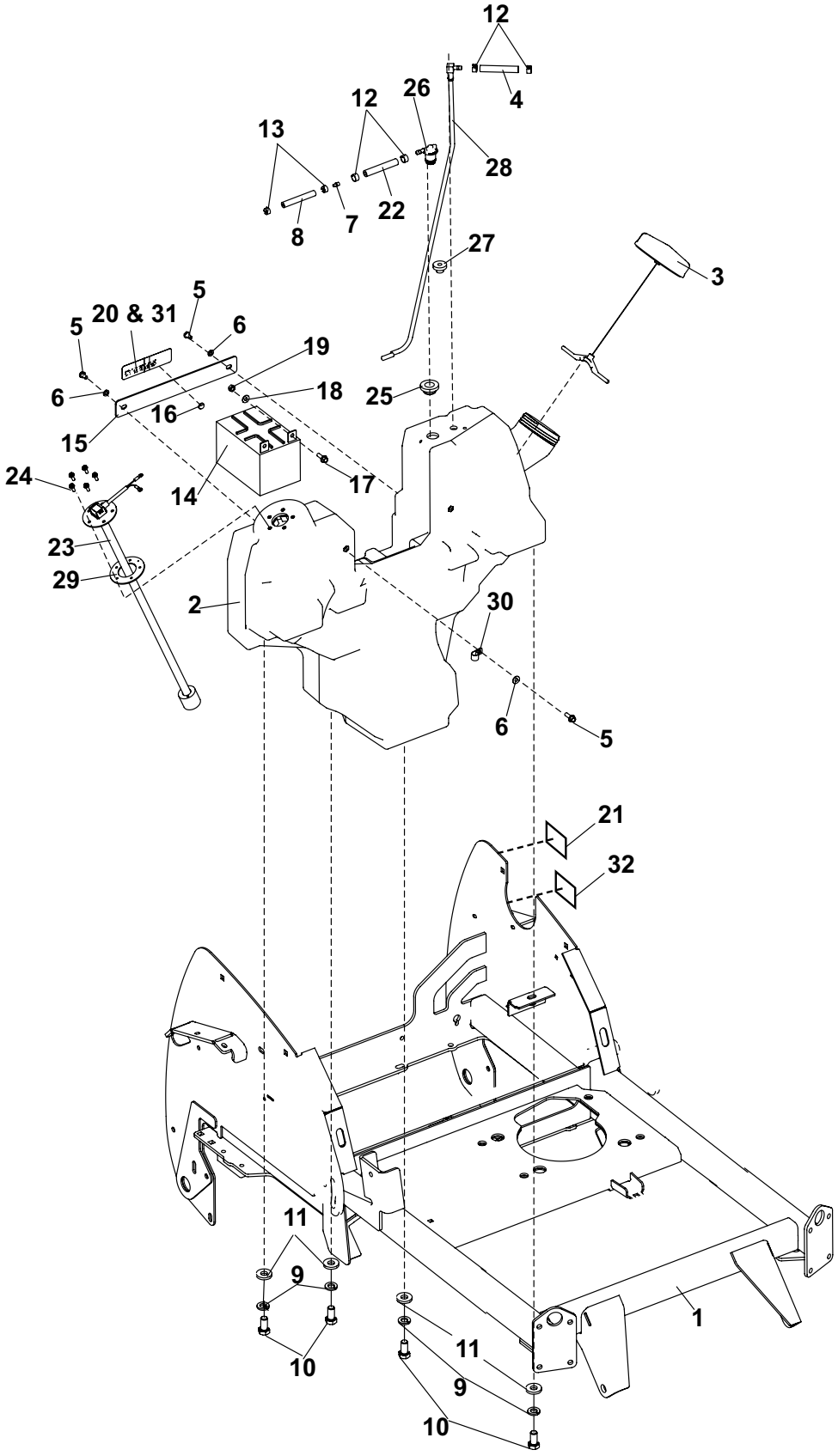

FUEL TANK & BATTERY ASSY

FIGURE 4

ITEM	PART NO.	DESCRIPTION	QTY
1	4178728	S-FRAME W/ LABELS	1
2	4175912	TANK-FUEL	1
	INCLUDES ITEMS 24-30		
3	4178085	CAP-FUEL 3.5", W/SCRATCH	1
4	4162977-001	HOSE, FUEL LINE 31 INCH	1
5	64123-49	BLT-HEX 1/4-20 X1/2	4
6	64006-01	LOCKWASHER-1/4 HELICAL	4
7	4165864	FITTING-1/4 TO 3/16	1
8	4162989-001	HOSE-FUEL LINE, 25IN	1
9	64006-03	LOCKWSHR-3/8 HELICAL	4
10	64123-50	BLT-HEX 3/8-16X1	4
11	64163-69	WSHR .391X.88X10 GA	4
12	88042N	CLAMP-HOSE	4
13	88042-01	CLAMP-HOSE 3/16	2
14	4171099	BATTERY-190CCA	1
*	4171973	CHARGER-BATTERY, AGM	
15	4178739	S-BRKT, BATTERY W/LABS	1
	INCLUDES ITEM 20		
16	4171586	BUMPER-RUBBER	1
17	64262-002	BLT-FLG HD 1/4-20 X 3/4	2
18	64163-03	WSHR .256ID X.62OD X 18 GA.	2
19	64025-01	1/4-20 HEX NUT	2
20	2000590	LABEL-WARN BATTERY	1
21	2000570	LABEL-WARN FUEL PICT	1
22	4162977-001	HOSE, FUEL LINE 6 INCH	1
23	4175912-01	SENDER-REED, FUEL 22"	1
24	64152-46	SCREW-SLT HH 10-24X1/2	5
25	4174343	GROMMET-ROLLOVER VENT	1
26	4165763	TANK VENT	1
27	4132325	GROMMET-SEALING	1
28	4175912-02	TUBE-FUEL, PICK-UP	1
29	4175914	GASKET-FUEL SENDER	1
30	48228A	CABLE CLIP-INSULATED	2

***NOT ILLUSTRATED**

ITEM	PART NO.	DESCRIPTION	QTY

PARKING BRAKE ASSY

FIGURE 5

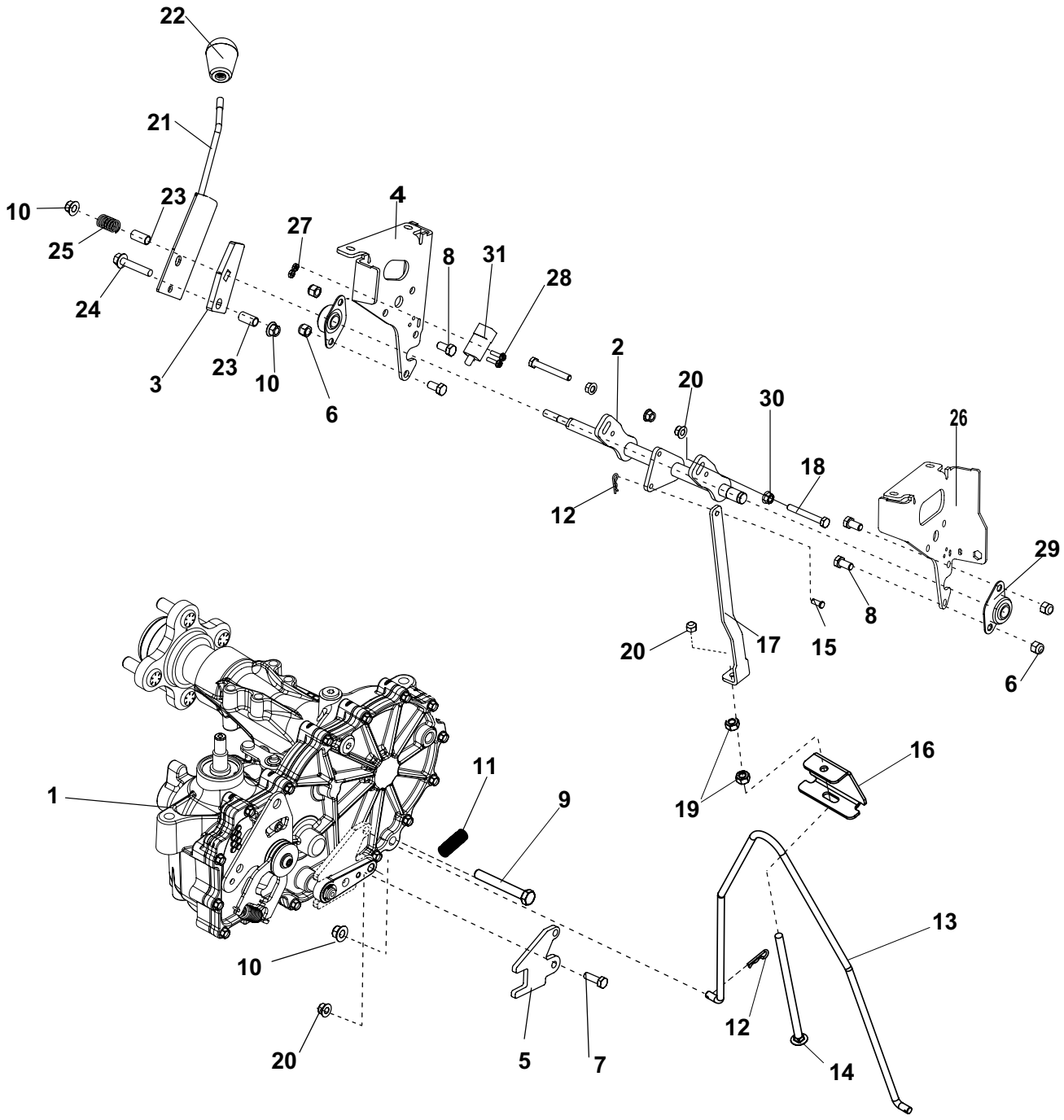

PARKING BRAKE ASSY

FIGURE 5

ITEM	PART NO.	DESCRIPTION	QTY
1	4178834	S-ASSYTRANSAXLE-LH	1
	4178835	S-ASSYTRANSAXLE-RH	1
2	4173481	WLDMT-PRKNG BRK/SPD CNTRL	1
3	4170934.46	PLATE- BRK & SPD CNTRL	1
4	4178733	S-BRKT, CONTROL RH	1
5	4172259.46	PLATE-PRKNG BRK SPRING	2
6	64229-03	NUT-NYLON LOCK 3/8-16	4
7	64123-68	BLT-HEX 5/16-18X1	2
8	64123-15	BLT-HEX 3/8-16X3/4	4
9	64123-88	BLT-HEX 3/8-16X2-3/4	2
10	64268-03	NUT-FL NYLON LOCK 3/8-16	4
11	2308065	SPRING-EXTENSION	2
12	64168-2	COTTER-HAIRPIN .08 X 1.19	3
13	4170367	ROD-PARKING BRAKE, LOWER	1
14	64018-57	BLT-CRG 5/16-18X6	1
15	64188-65	PIN-CLEVIS, 1/4 X .62	1
16	4168217.46	BRACKET-CLIP, RETAINER	1
17	4176179.46	BRKT-PAKNG BRAKE UPPER	1
18	64123-12	BLT-HEX 5/16-18X2-1/2	2
19	64025-02	NUT-HEX 5/16-18	3
20	64268-02	NUT-FL NYLON LOCK 5/16-18	5
21	4176054	WLDMNT-SPD CNTRL HANDLE	1
22	4176120	KNOB-1.32" TAPERED, 3/8 THRD	1
23	516544	BUSHING (PLATING)	2
24	64262-014	BLT-FLG HD 3/8-16 X 2	1
25	41-053	SPRING COMP .681 X 1.125	1
26	4178734	S-BRKT, CONTROL LH	1
27	64025-15	NUT-HEX #10-24 KEPS	2
28	64152-49	SCREW-SLT HH 10-24X1/2	2
29	2188145-01	BEARING-.75ID BRZ SELF ALIGN	2
30	64141-6	NUT-WLF 5/16-18	2
31	2188156	SWITCH-NONO DBL POLE	1

*NOT ILLUSTRATED

ITEM	PART NO.	DESCRIPTION	QTY

UPPER WIRE HARNESS

FIGURE 6

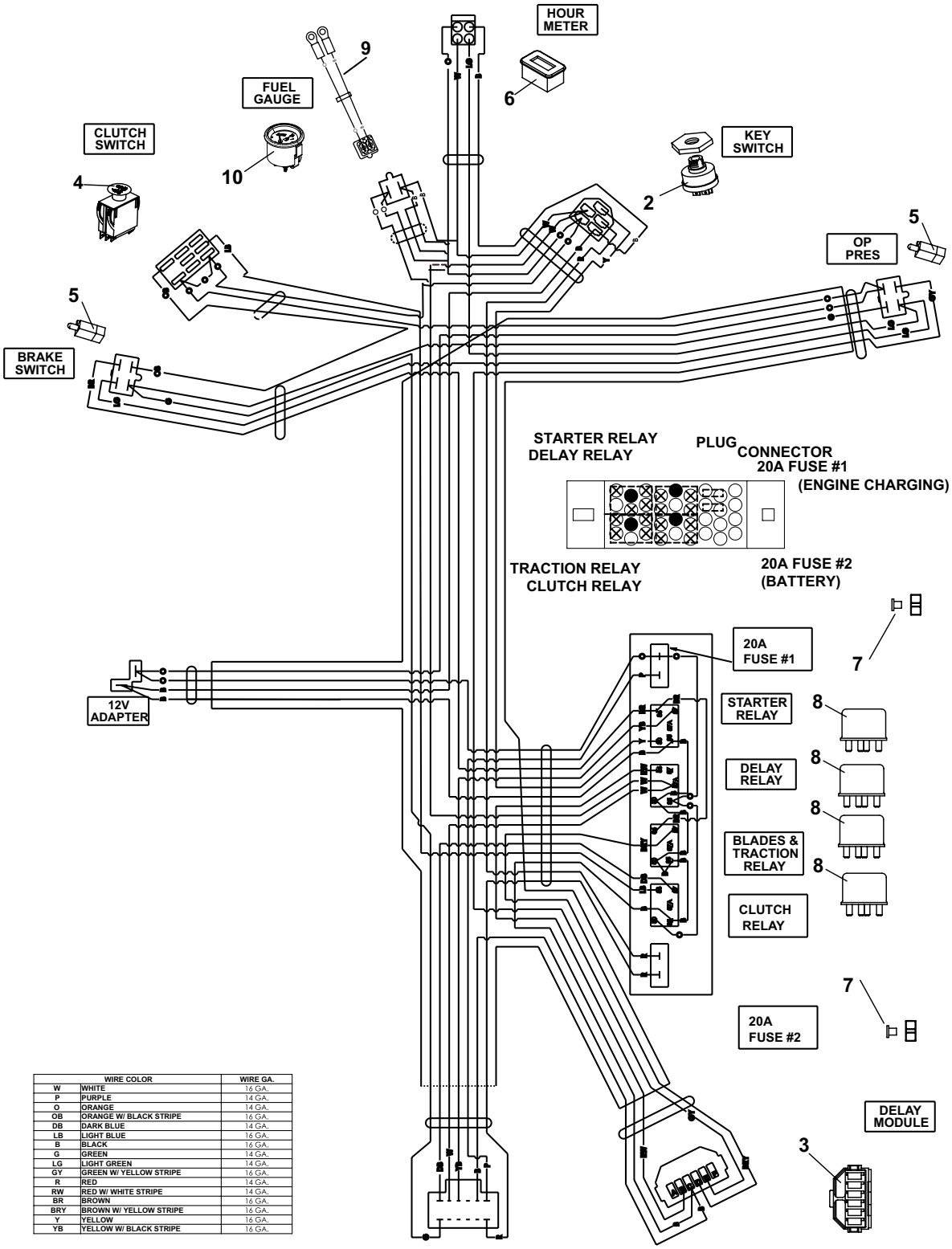

	WIRE COLOR	WIRE GA.
W	WHITE	16 GA.
P	PURPLE	14 GA.
O	ORANGE	14 GA.
OB	ORANGE W/ BLACK STRIPE	16 GA.
DB	DARK BLUE	14 GA.
LB	LIGHT BLUE	16 GA.
B	BLACK	16 GA.
G	GREEN	14 GA.
LG	LIGHT GREEN	14 GA.
GY	GREEN W/ YELLOW STRIPE	16 GA.
R	RED	14 GA.
RW	RED W/ WHITE STRIPE	14 GA.
BR	BROWN	16 GA.
BRY	BROWN W/ YELLOW STRIPE	16 GA.
Y	YELLOW	16 GA.
YB	YELLOW W/ BLACK STRIPE	16 GA.

UPPER WIRE HARNESS

FIGURE 6

ITEM	PART NO.	DESCRIPTION	QTY
1	4176733	HARNESS-WIRING, UPPR	1
2	128010	SWITCH, KEY	1
3	2188154	MODULE-DELAY	1
4	2721505	SWITCH-PTO	1
5	2188156	SWITCH-NONO DBL POLE	2
6	4177930	METER-HOUR MAG SENSOR	1
7	4173756	FUSE-20 AMP MINI	2
8	4173755	RELAY-SPDT MICRO	4
9	4176734	HARNESS-JUMPER, FUEL GAUGE	1
10	4176839	GAUGE, FUEL	1

***NOT ILLUSTRATED**

ITEM	PART NO.	DESCRIPTION	QTY

NON EFI 48" LOWER WIRE HARNESS

FIGURE 7

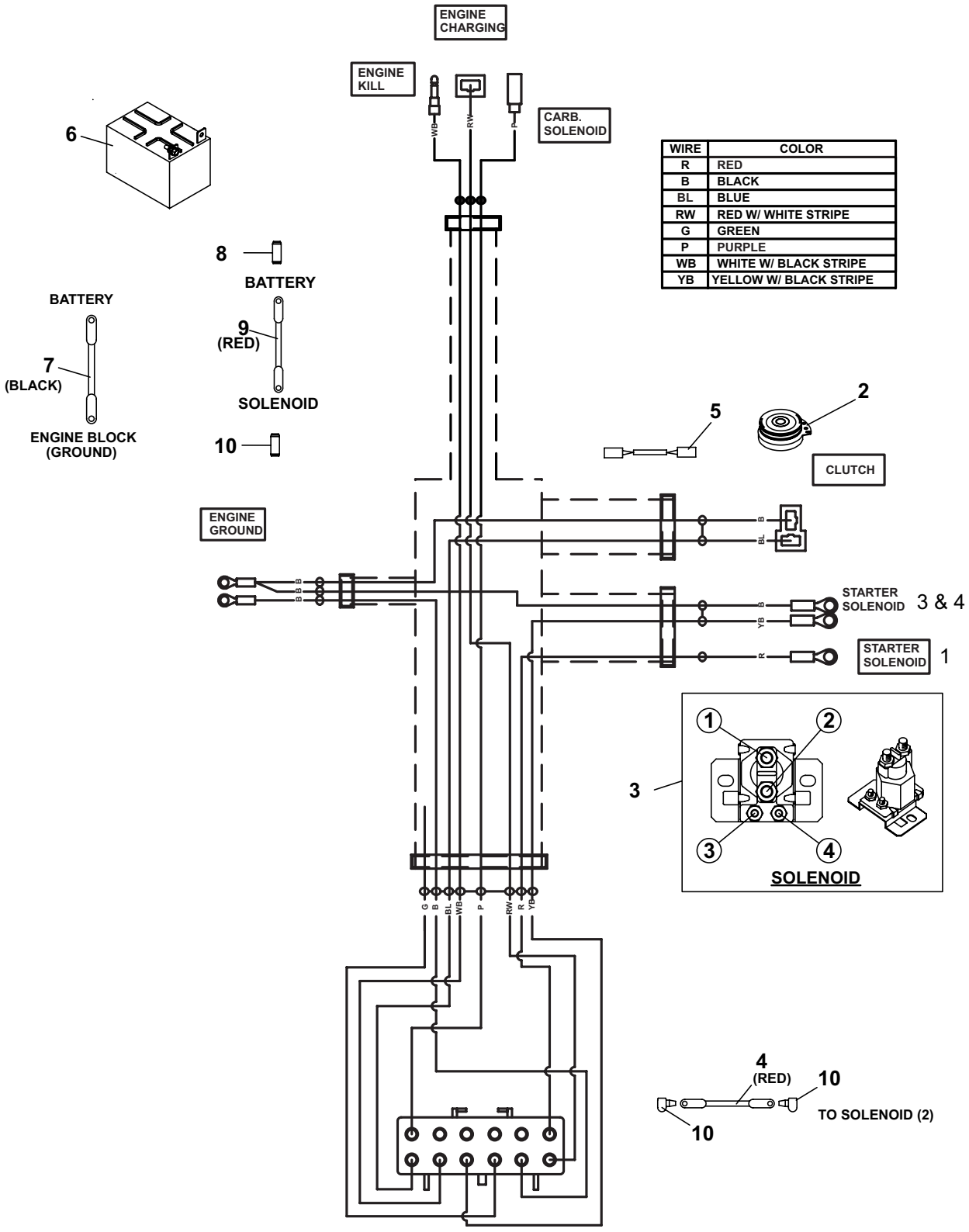

WIRE	COLOR
R	RED
B	BLACK
BL	BLUE
RW	RED W/ WHITE STRIPE
G	GREEN
P	PURPLE
WB	WHITE W/ BLACK STRIPE
YB	YELLOW W/ BLACK STRIPE

NON EFI 48" LOWER WIRE HARNESS

FIGURE 7

ITEM	PART NO.	DESCRIPTION	QTY
1	4173594	HARNESS-WIRING, LOWER	1
2	4171141	CLUTCH-ELECTRICAL	1
3	38665	SOLENOID	1
4	108061-04	CABLE-BATTERY 20 RED	1
5	2720949	ASSY-CLUTCH WIRE	1
6	4171099	BATTERY-190CCA	1
*	4171973	CHARGER-BATTERY,AGM	
7	30-419	CABLE-BATTERY BLACK 29	1
8	112386	BOOT-BATTERY TERM POS	1
9	2722227-02	CABLE-BATTERY W/CONDUIT	1
10	2308095	COVER-TERMINAL	3

ITEM	PART NO.	DESCRIPTION	QTY

EFI 52" & 61" LOWER WIRE HARNESS

FIGURE 8

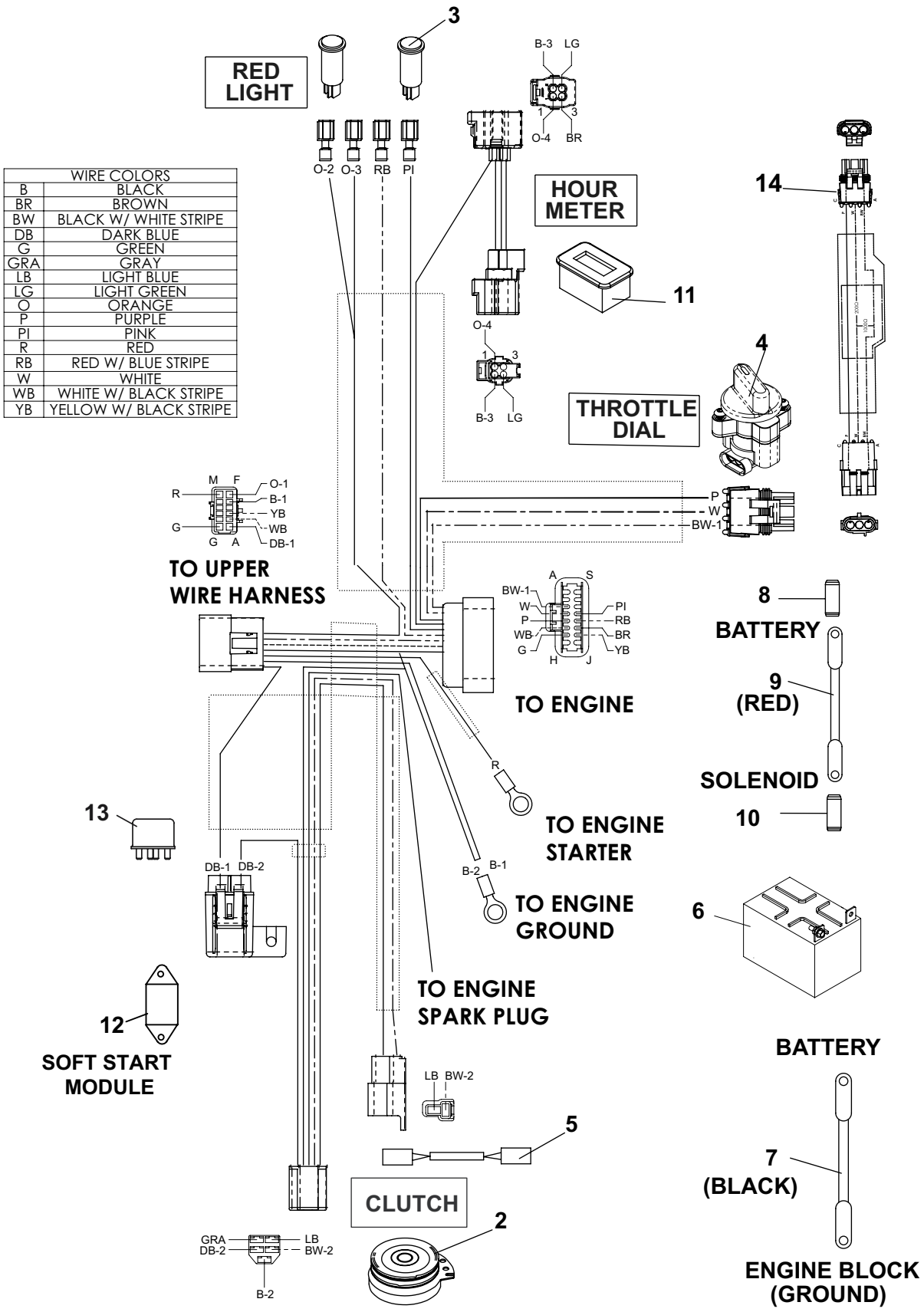

EFI 52"& 61" LOWER WIRE HARNESS

FIGURE 8

ITEM	PART NO.	DESCRIPTION	QTY
1	4176543	HARNESS-WIRING, LOWER	1
2	4171141	CLUTCH-ELECTRICAL	1
3	4176576	LIGHT-LED, RED INDICATOR	2
4	4176438	THROTTLE-ELECT, DIAL	1
5	2720949	ASSY-CLUTCH WIRE	1
6	4177381	BATTERY-U1, 12V 300CCA	1
7	30-419	CABLE-BATTERY BLACK 29	1
8	2308095	BOOT-BATTERY TERM POS	1
9	2722227-02	CABLE-BATTERY W/CONDUIT	1
10	2308095	COVER-TERMINAL	3
11	4177930	HOUR METER-MAG SENSE	1
12	4169459	CONTROL-SOFT START	1
13	148082-10	FUSE 10 AMP	1
14	4177904	HARNESS-JUMPER EFI	1
	USED ONLY ON 61" EFI MODELS		

***NOT ILLUSTRATED**

ITEM	PART NO.	DESCRIPTION	QTY

TOWER ASSY

FIGURE 9

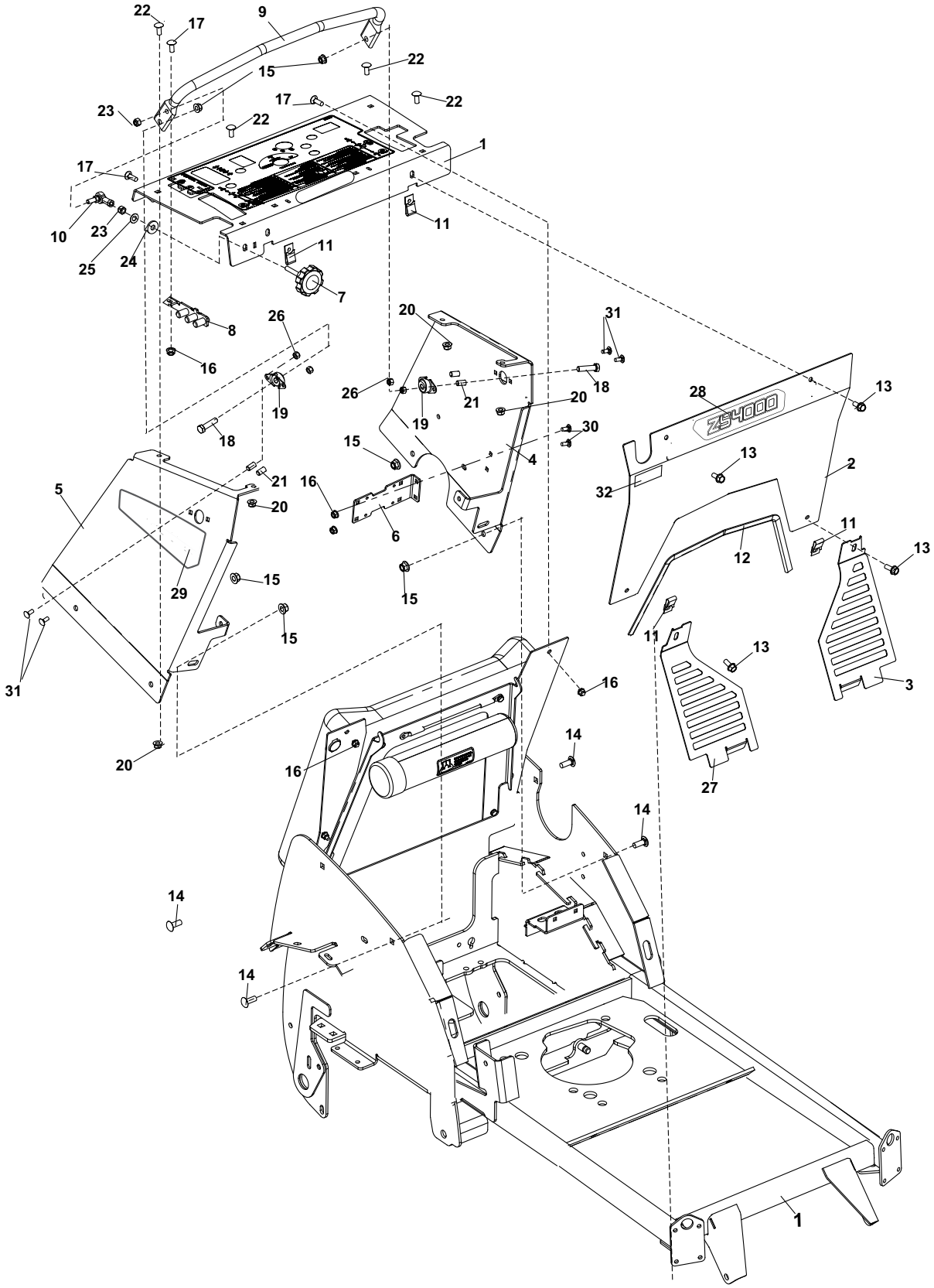

TOWER ASSY

FIGURE 9

ITEM	PART NO.	DESCRIPTION	QTY
1	4178736	S-CONTROL PANEL W/LABELS NON EFI MODELS	1
	4178737	S-CONTROLS PANEL EFI W/LAB EFI MODELS	1
2	4176341.45	PANEL-TOWER FRONT	1
3	4170601.46	GUARD-FAN,LH	1
4	4176343.45	PANEL-TOWER LH	1
5	4176342.45	PANEL-TOWER RH	1
6	4176609.46	BRKT-RELAY MNTG	1
7	4176700	KNOB-FLUTED, 5/16-24 X 2.00	1
8	4173635.46	WLDMT-PARKING BRK STOP	1
9	4176266.46	ROD-POR, FRONT	1
10	4167343-01	ROD END-FML W/BALL STUD	1
11	800889	NUT .31-18 NS SPD J W/NUT	4
12	56-046-03	TRIM LOK 28.00" LONG	1
13	64262-007	BLT-FLG HD 5/16-18 X 1	4
14	64018-44	BLT-CRG 3/8-16X1 SN	4
15	64268-03	NUT-FL NYLON LOCK 3/8-16	6
16	64268-01	NUT-FL NYLON LOCK 1/4-20	5
17	64018-41	BLT-CRG 1/4-20 X 5/8	3
18	64123-70	BLT-HEX 3/8-16X1-1/2	2
19	4176287-01	BEARING-SMALL SLF ALGN	2
20	64268-02	NUT-FL NYLON LOCK 5/16-18	4
21	4116380-01	SPACER .272X.438X.635	4
22	64018-51	BLT-CRG 5/16-18 X 3/4 SN	4
23	64229-08	NUT-NYLON LOCK 5/16-24	2
24	4169895	WASHER-FRICTION,UHMW	1
25	4169871	WASHER-BELLVILLE,.382 ID	1
26	64229-01	NUT-NYLON LOCK 1/4-20	4
27	4170600.46	GUARD-FAN,RH	1
28	4178829	LABEL-ZS4000 MODEL	1
29	4178639	LABEL-SIDE, RH 4000	1
*	4178638	LABEL-SIDE, LH 4000	1
30	64018-2	BLT-CRG 1/4-20X3/4	2
31	64018-67	BLT-CRG 1/4-20X1-1/4	4
32	4177207	LABEL-POR ADJUSTMENT	1

*NOT ILLUSTRATED

ITEM	PART NO.	DESCRIPTION	QTY

RIDER PAD & FENDER ASSY

FIGURE 10

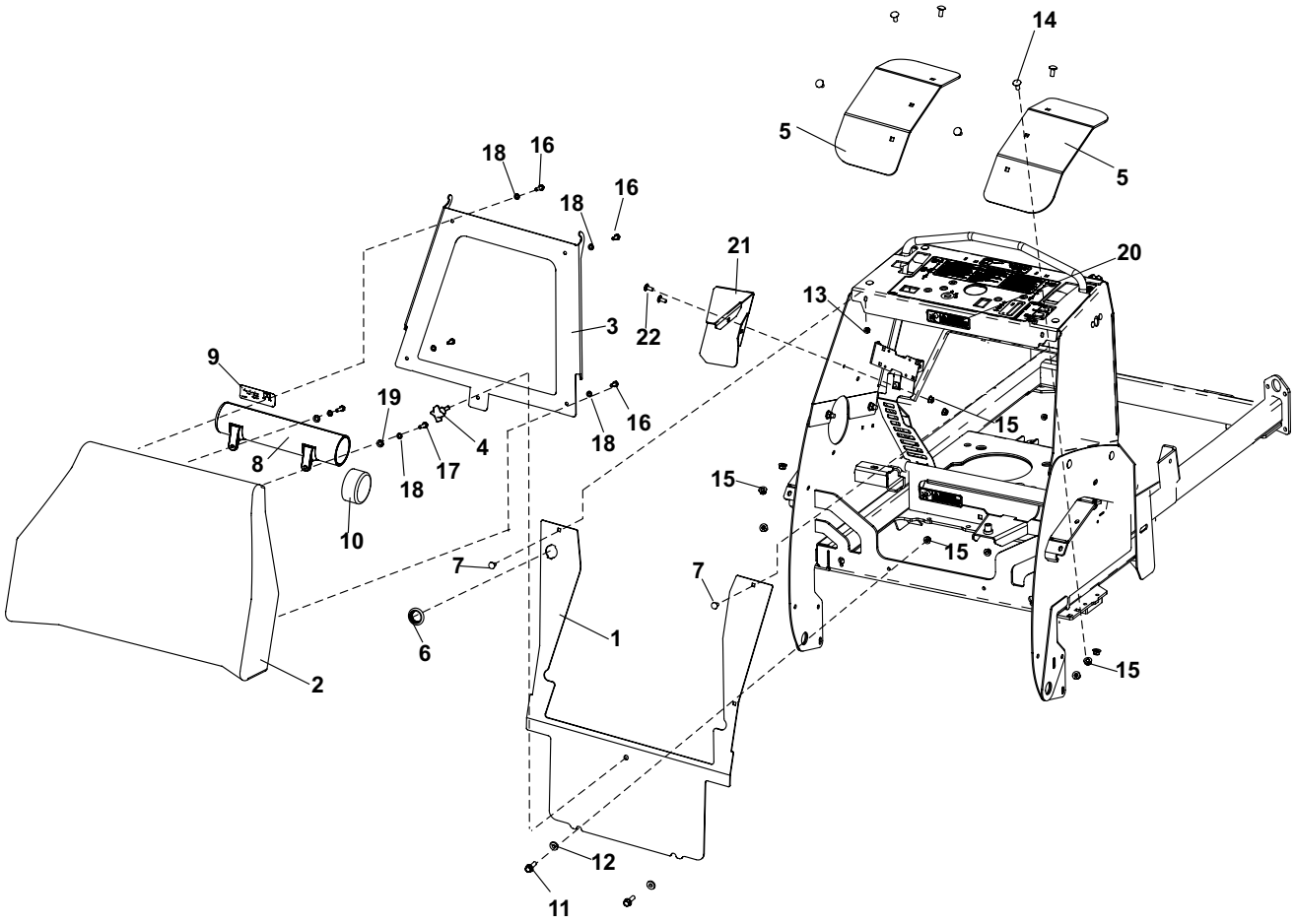

RIDER PAD & FENDER ASSY

FIGURE 10

ITEM	PART NO.	DESCRIPTION	QTY
1	4179703	PANEL-REAR TOWER	1
2	4178565	PAD-RIDER, WIDE	1
3	4179591.46	BRKT-PAD,SUPPORT	1
4	2722458	KNOB-4 PRONG 5/16-18 X.75LG	1
5	4170598.46	FENDER-WHEEL	2
6	4167193	PLUG-PLASTIC, 1.125"	1
7	64018-41	BLT-CRG 1/4-20 X 5/8	2
8	4160281	S-DOCUMENT TUBE/LABEL	1
9	2000735	LABEL-OPER MAN	1
10	38061A	CAP-BLACK VINYL	1
11	64262-007	BLT-FLG HD 5/16-18 X 1	2
12	4170388	SPACER-FOOTPLATE LATCH	2
13	64268-01	NUT-FL NYLON LOCK 1/4-20	3
14	64018-15	BLT-CRG 5/16-18X1 SN	6
15	64268-02	NUT-FL NYLON LOCK 5/16-18	10
16	64123-89	BLT-HEX 1/4-20X3/4	3
17	64123-114	BLT-HEX 1/4-20X1	3
18	64006-01	LOCKWSHR-1/4 HELICAL	6
19	64163-02	WSHR .321X.593X11GA	2
20	4171344	LABEL-OPS MANUAL	1
21	4170614.46	BRKT-SHIELD,FILLER	1
22	64018-51	BLT-CRG 5/16-18 X 3/4 S/N	2

ITEM	PART NO.	DESCRIPTION	QTY

CONTROLS

FIGURE 11

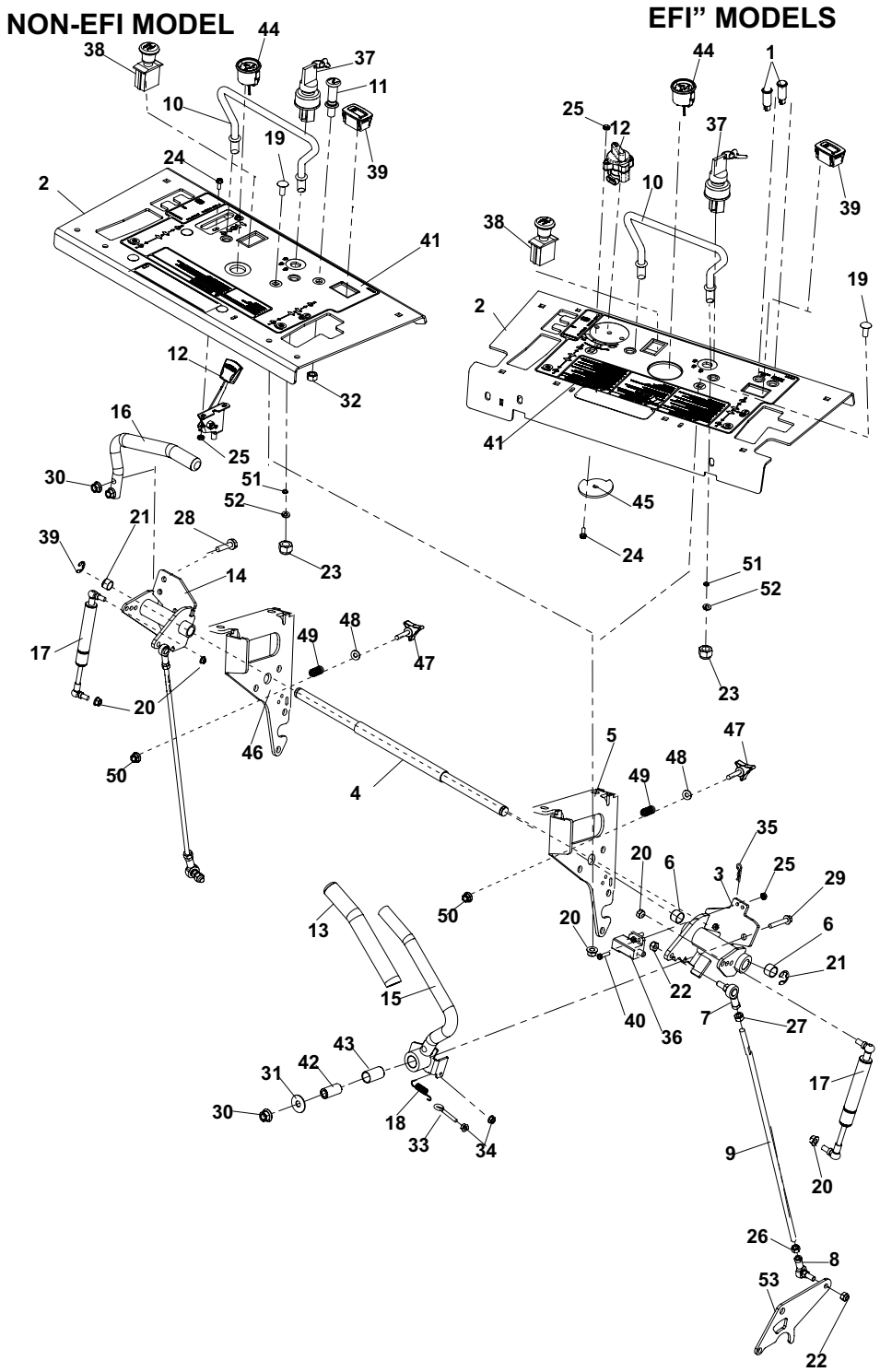

FIGURE 11

ITEM	PART NO.	DESCRIPTION	QTY
1	4176576	LIGHT-RED LED INDICATOR USED ON EFI MODELS	2
2	4178736	S-PANEL-CONTROL W/LAB USED ON 9994002	1
	4178737	S-PANEL CONTROL W/LAB 52" USED ON 9994003 , 9994004	
3	4176939	S-CONTROL,LH (INCLUDES ITEM 6)	1
4	4170532	SHAFT-CONTROL HANDLE	1
5	4178734	S-BRKT CONTROL LH	1
6	4166324-05	BEARING-SLEAVE .625X.50	4
7	4167343-02	ROD END-5/16 FEM LFT	2
8	4167343-01	ROD END-5/16 FEM RHT	2
9	4176180	ROD-CONTROL	2
10	4173321	ROD-POINT OF REFERENCE	1
11	108009-03	CONTROL-CHOKE 51 USED ON 9994002	1
12	118020-22	CONTROL-THROTTLE, 57.5IN USED ON 9994002	1
	4176438	THROTTLE-ELECTRONIC DIAL USED ON 9994003 , 9994004	
13	4172963	GRIP-3/4 X 7.5	2
14	4178734	S-CONTROL,RH (INCLUDES ITEM 6)	1
15	4171587	S-HANDLE OP PRESENCE	1
16	4171171	CONTROL HANDLE	1
17	2228065	DAMPER-NON-CAVITATING	2
18	4171461	SPRING, EXT	1
19	64018-51	BLT-CRG 5/16-18 X 3/4 SN	4
20	64268-02	NUT-FL NYLON LOCK 5/16-18	8
21	64221-02	E-RING .625	2
22	64229-08	LOCKNUT NYLON 5/16-24	4
23	64025-19	NUT-1/2-13 HEX	2
24	64152-46	SCREW-SLT HH 10-24X1/2 QTY 2 ON NON-EFI MODELS QTY 1 ON EFI MODELS	
25	64025-15	NUT-HEX #10-24 KEPS QTY 4 ON NON EFI MODELS QTY 1 ON EFI MODELS	
26	64025-03	NUT-HEX 5/16-2424	2
27	64025-33	NUT-HEX 5/16-24 LH	2
28	64262-013	BLT-FLG HD 3/8-16 X 1-1/2	2
29	64262-027	BLT-FLG 3/8-16 X 2-1/4	1
30	64268-03	NUT-FL NYLON LOCK 3/8-16	3
31	64163-31	WSHR-.25/64X1X12	1
32	64025-04	NUT-3/8-24 HEX USED ON NON EFI MODELS	1
33	64158-01	EYE BOLT-10-24 X 1.25	1
34	64141-15	NUT-WLF 10-24	2
35	64168-2	COTTER-HAIRPIN .08 X 1.19	1
36	2188156	SWITCH-NONO DBL POLE	1
37	128010	SWITCH KEY 5	1
38	2721505	SWITCH-PTO	1
39	4177930	METER-HOUR, ALERTS	1
40	64152-49	SCREW-SLT HH 10-24X3/4	2
41	4178626	LABEL-CONTROL USED ON 9994002	1
	4178625	LABEL-CONTROL USED ON 9994003 , 9994004	
42	4171409	SPACER-.625X.386X1.26	1
43	4166324-04	BEARING-PLASTIC .625X1	1
44	4176839	GAUGE-FUEL	1
45	4178099	PLT-KNOW STOP USED ONLY ON 9994003 , 9994004	1
46	4178733	S-BRKT CONTROL RH	1
47	4163446	KNOB-3 PRONG MALE, 5/16-18	2
48	64163-55	WSHR .328X.75X14 GA	2
49	41-053	SPRING COMP .681 X 1.125	2
50	64151-41	NUT-HEX,5/16-18 NYLON JAM	2
51	64006-05	LOCKWSHR-1/2 HELICAL	2
52	64163-19	WSHR 33/64X1-1/4X12GA	2
53	4173339.46	PLATE-TRANSAXLE	2

REAR DECK LIFT ASSY / HOC

FIGURE 12

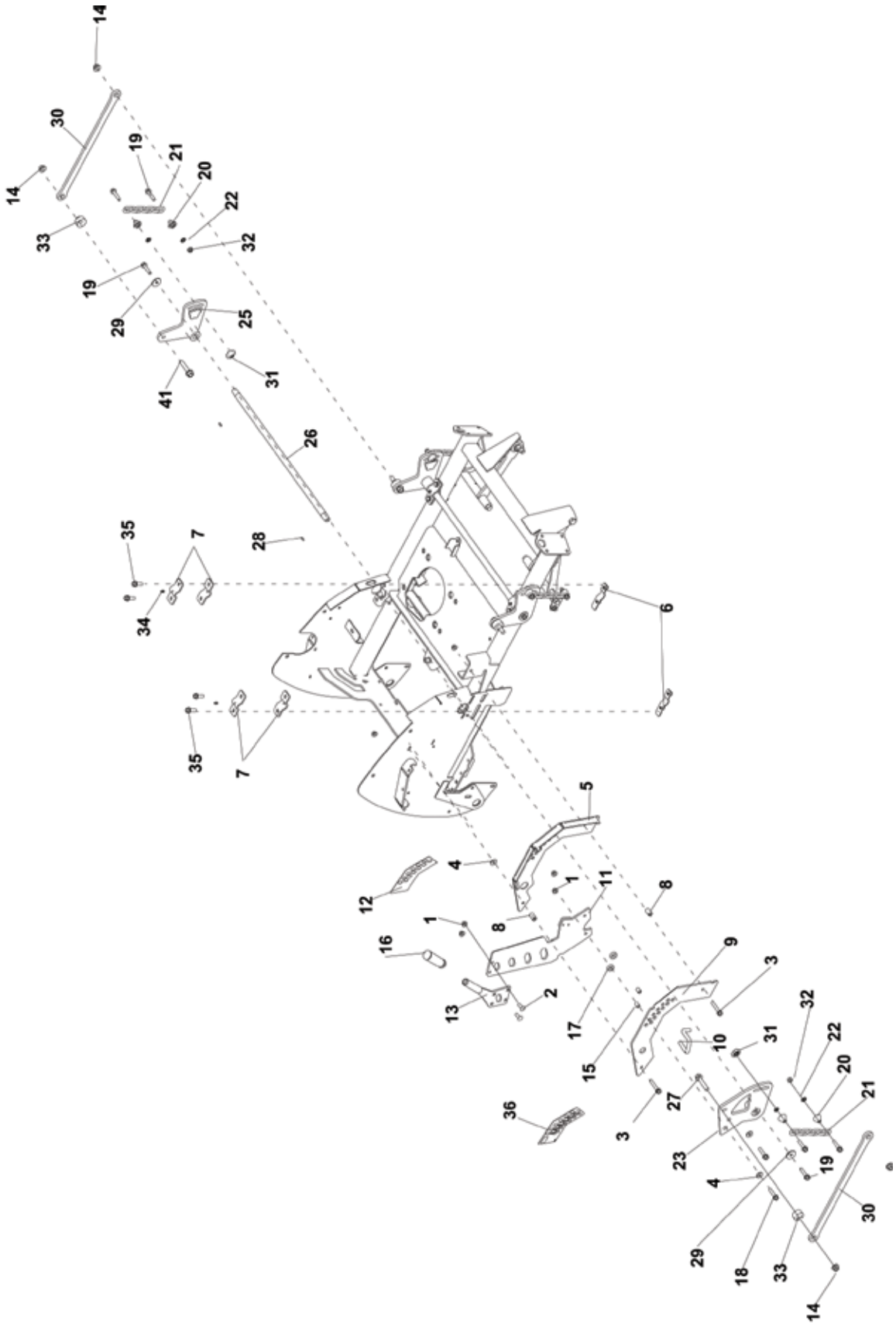

REAR DECK LIFT ASSY / HOC

FIGURE 12

ITEM	PART NO.	DESCRIPTION	QTY
1	64268-03	NUT-FL NYLON LOCK 3/8-16	4
2	64018-44	BLT-CRG 3/8-16X1 SN	2
3	64262-027	BLT-FLG HD 3/8-16 X 2-1/4 GR8	2
4	64163-31	WSHR 25/64X1X12	3
5	4173145.46	WLDMT-HOC	1
6	4178403	WLDMT-SPACER	2
7	4177871	BRKT-HANGER, DECK LIFT	4
8	2183071-05	SPACER-15.88X10.32X25.7	2
9	4173146.46	WLDMT-HOC	1
10	4177355	PIN-DECK LIFT	1
11	4176555.46	WLDMT-HOC HANDLE, BOTTOM	1
12	4170988	LABEL-HOC INNER	1
13	4176557.46	WLDMT-HOC HANDLE, TOP	1
14	64268-05	NUT-FL NYLON LOCK 1/2-13	2
15	4173208	SPACER-HOC ARM	2
16	522727	GRIP-HANDLE	1
17	517162	SPACER, RUBBER .328 (8mm)	2
18	64262-029	BLT-FLG HD 3/8-16 X 1-3/4 GR8	2
19	64262-018	BLT-FLG HD 3/8-16 X 1-3/4	6
20	4178684	SPCR-DECK HANGING	8
21	4169126-01	CHAIN-6.35 (.250) 7 LINKS	4
22	64279-03	PUSHNUT-BOLT RETAINER 3/8	8
23	4177859	SPACER-1.75 X 1.02 X 1.317	4
24	4177872.46	PLT-DECK LIFT, HOC	1
25	4177873.46	WLDMT-LEFT, DECK LIFT	1
26	4177858	SHAFT-DECK LIFT	2
27	64262-030	BLT-FLG HD 1/2-13 X 2-1/2	2
28	64164-37	KEY, WDRF 5/16 X 5/8 #605	4
29	64163-53	WSHR .391X1.50X9GA	2
30	4178363.46	PLT-LINK, DECK LIFT	2
31	4173954	PLT-HOC GEAR, NUT	2
32	64141-16	NUT-WLF 3/8-16,LRG FLNG	2
33	4174012	SPACER-LIFT ARM, LONG	2
34	85010N	ZERK 1/4-28 STR SELF THREAD	2
35	64287-005	BLT-FLG HD 3/8-16 X 1-1/4	4
36	4170988	LABEL-HOC INNER	1

*** NOT ILLUSTRATED**

ITEM	PART NO.	DESCRIPTION	QTY

FRONT DECK LIFT ASSY / HOC

FIGURE 13

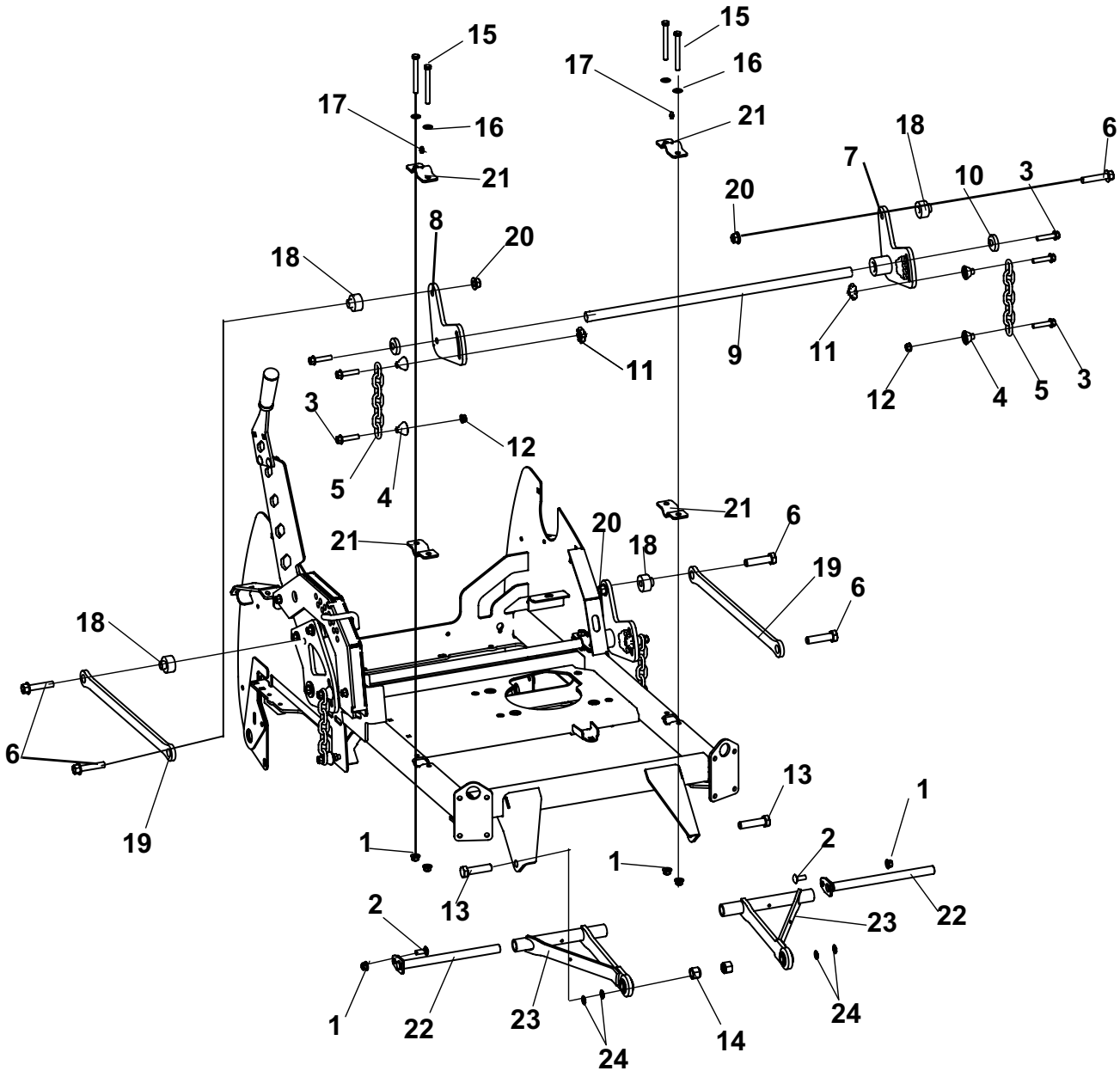

FRONT DECK LIFT ASSY / HOC

FIGURE 13

ITEM	PART NO.	DESCRIPTION	QTY
1	64268-03	NUT-FL NYLON LOCK 3/8-16	6
2	64018-44	BLT-CRG 3/8-16X1 SN	2
3	64262-018	BLT-FLG HD 3/8-16 X 1-3/4	6
4	4178684	SPCR-DECK HANGING	4
5	4169126-01	CHAIN-6.35 (.250) 7 LINKS	2
6	64262-030	BLT-FLG HD 1/2-13 X 2-1/2	2
7	4177873.46	WLDMT-LEFT, DECK LIFT	1
8	4177874.46	WLDMT-RIGHT, DECK LIFT	1
9	4177858	SHAFT-DECK LIFT	2
10	64163-53	WSHR .391X1.50X9GA	2
11	4173954	PLT-HOC GEAR, NUT	2
12	64141-16	NUT-WLF 3/8-16,LRG FLNG	2
13	64123-168	BLT-HEX 5/8-11X2-1/2	2
14	64229-06	NUT-NYLON LOCK 5/8-11	2
15	64123-171	BLT-HEX 3/8-16X3-1/2	4
16	64163-61	WSHR .81X.406X16GA	4
17	85010N	ZERK 1/4-28 STR SELF TAP	2
18	4174012	SPACER-LIFT ARM, LONG	4
19	4178363.46	PLT-LINK, DECK LIFT	2
20	64268-05	NUT-FL NYLON LOCK 1/2-13	4
21	4177871.46	BRKT-HANGER, DECK LIFT	4
22	4177840	WLDMT-PULLARM SHAFT	2
23	4177839.46	WLDMT-PULLARM	2
24	64163-26	WSHR .766 ID X 1.625	2

ITEM	PART NO.	DESCRIPTION	QTY

CASTER ASSY

FIGURE 14

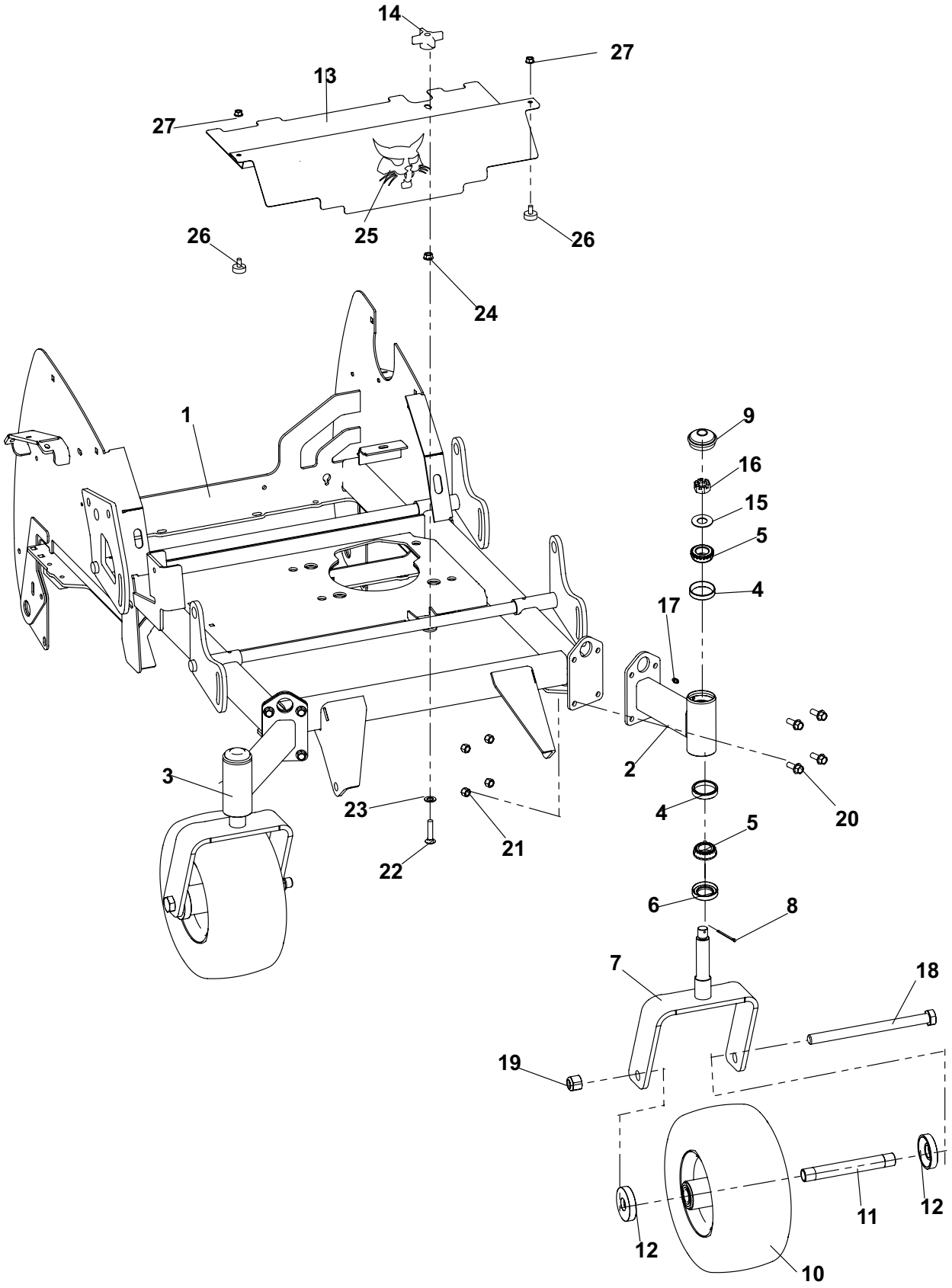

CASTER ASSY

FIGURE 14

ITEM	PART NO.	DESCRIPTION	QTY
1	4178728	S-FRAME W/ LABELS	1
2	4178503.45	WLDMT-CASTER ARM, LH (INCLUDES ITEM 4) USED ON 48" & 52"	1
	4170993.45	WLDMT-CASTER ARM, LH (INCLUDES ITEM 4) USED ON 61"	1
3	4178504.45	WLDMT-CASTER ARM, RH (INCLUDES ITEM 4) USED ON 48" & 52"	1
	4170994.45	WLDMT-CASTER ARM, RH (INCLUDES ITEMS 4) USED ON 61"	1
4	48043-03C	CUP OUTER BEARING	4
5	48043-04C	CONE-OUTER BEARING	4
6	48480	SEAL CR 12411	2
7	4174642.46	WLDMT-CASTER YOKE	2
8	64140-5	COTTER PIN-1/4-2	2
9	4162986	CAP-END	2
10	4178450	WHEEL-ASSY, 13X6.50-6	2
	4179540	WHEEL-ASSY, 13X6.50-6 NO FLAT OPTIONAL NO FLAT TIRE	2
11	2722230-03	SPANNER-13X6.5 WHEEL	2
12	2722231	SPACER-END	4
13	4177857.46	COVER-BELT, CNTR	1
14	38524	KNOB-4 PRONG 3/8-16	1
15	64209-17	WSHR-CON SPRNG .75X1.5	2
16	64025-20	NUT-HEX 3/4-16 SLOT U	2
17	85010N	ZERK 1/4-28 STR SLF THD	2
18	64123-223	BLT-HEX 3/4-10X10	2
19	64229-07	NUT-NYLON LOCK 3/4-10	2
20	64262-011	BLT-FLG HD 3/8-16 X 1	8
21	64229-03	NUT-NYLON LOCK 3/8-16	8
22	64018-39	BLT-CRG 3/8-16X1-3/4 FL TH	1
23	64163-98	WSHR-.515X.875X14GA	1
24	64141-4	NUT-WLF 3/8-16	1
25	4178634	LABEL-LARGE CAT	1
26	4143354	BUMPER-RUBBER	2
27	64141-6	NUT-WLF 5/16-18	2

ITEM	PART NO.	DESCRIPTION	QTY

48" SIDE DECK ASSY

FIGURE 15

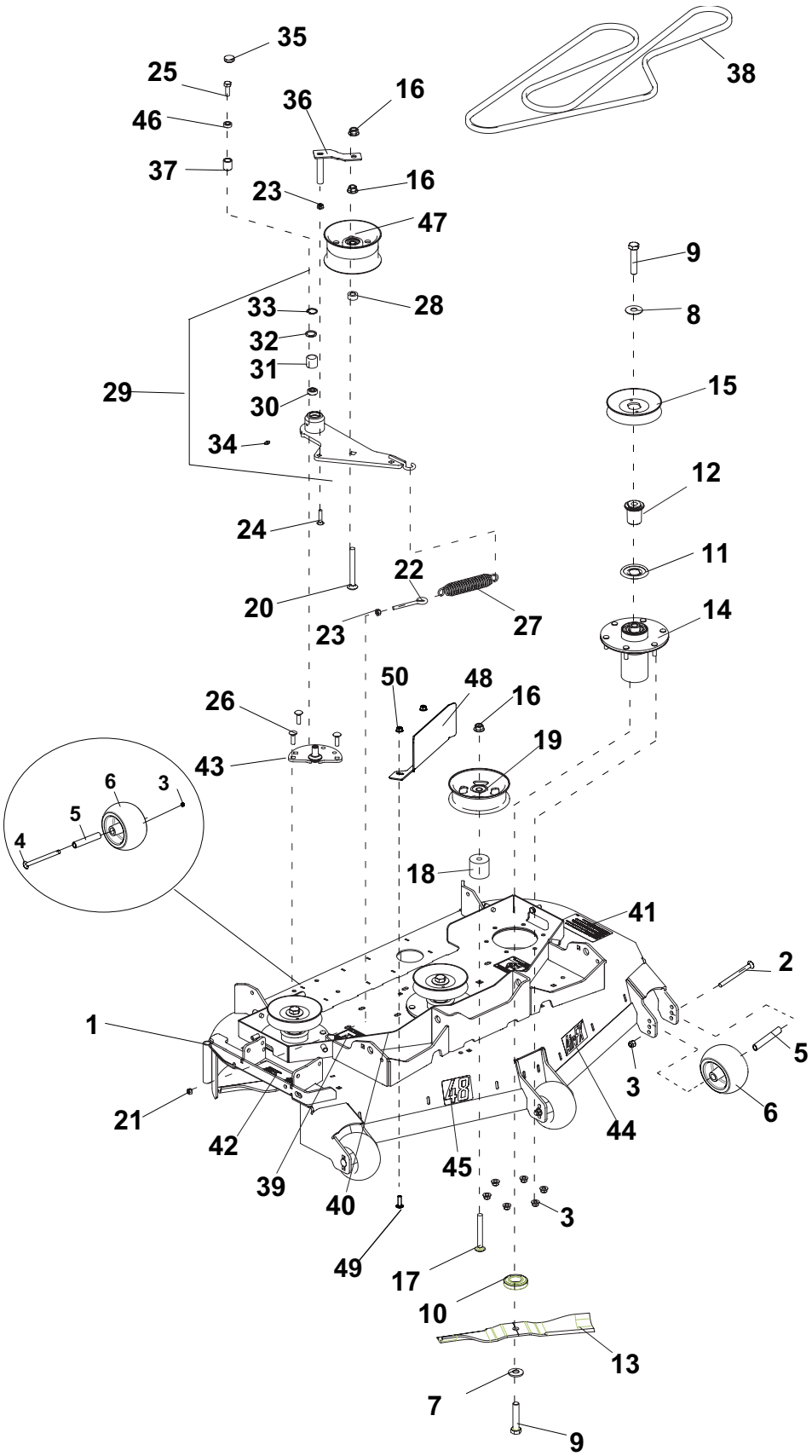

48" SIDE DECK ASSY

FIGURE 15

ITEM	PART NO.	DESCRIPTION	QTY
1	4178725	S-CUTTERDECK,48IN	1
2	64018-30	BLT-CRG 3/8-16 X 4-1/2	3
3	64268-03	NUT-FL NYLON LOCK 3/8-16	22
4	64123-217	BLT-HEX 3/8-16X4-1/4	1
5	2720685	SPACER-ROLLER	4
6	2721512	ROLLER-5X2.75 CENTERED	4
7	64209-03	SPRING WASHER.67 ID	3
8	64209-16	WSHR-CON SPRING .67 ID	3
9	64123-133	BLT-HEX 5/8-18X3	6
10	4174961-1	SPINDLE-SPACER,BLADE 0.63IN	3
11	4175081	SPINDLE-SPACER, SLINGER	3
12	4175082-6	SPINDLE-SPACER,PULLEY 1.931	3
13	112111-01	BLADE 16.25 OFFST HLFT	3
	112111-01-LE	BLADE 16.25 LAZER EDGE (OPT)	
14	4178252	ASSY-SPINDLE,6 BOLT,30MM	3
15	4174433	PULLEY-SPINDLE, 48IN	3
16	64268-05	NUT-FL NYLON LOCK 1/2-13	3
17	64018-21	BLT-CRG 1/2-13X4	1
18	4152578-04	SPACER-2.0 X .516 X 1.81	1
19	4176312-02	PULLEY-IDLER,5.50"X1.50"W	1
20	64018-33	BLT-CRG 1/2-13 X 4-1/2	1
21	64229-02	NUT-NYLON LOCK 5/16-18	1
22	64158-08	EYE BOLT 5/16-18 X 2.5 THD LG	1
23	64141-6	NUT-WLF 5/16-18	2
24	64018-34	BLT-CRG 5/16-18 X 1-1/2	1
25	64270-02	BLT-HEX M10-1.5x30 ISO CL10.9	1
26	64018-7	BLT-CRG 3/8-16X1-1/4	3
27	4169716	SPRING-EXTENSION	1
28	4163802-04	SPACER-1.0 X .516 X .936	1
29	4177819	ASSY-IDLER ARM	1
	INCLUDES ITEMS 30-34		
30	4128004	BEARING-BALL 10 X 26 X 8	1
31	548138	BRG NDL.88 1.12 1.00 OPEN END	1
32	521438	GREASE SEAL	1
33	64144-40	RING-RET 26MM INT	1
34	85010N	ZERK 1/4-28 STR SELF TAP	1
35	4128002	CAP-26 X 7 END	1
36	4170510.46	WLDMT-IDLER BELT GUIDE	1
37	4163155	INNER RING	1
38	4171864	BELT-48IN DECK	1
39	2000577	LABEL WARNING	3
40	4171408	LABEL-SPRING LENGTH	1
41	2000572	LABEL-WARNING BLADES	1
42	4164269	LABEL-WARNING THROWN OBJTS	1
43	4170021.46	WLDMT-IDLER PIN	1
44	4175433	LABEL-AIRFX	1
45	4162914	LABEL-DECK SIZE, 48	1
46	4163014	SPACER	1
47	4170088	PULLEY-5.25IN OD X 2.5IN W	1
48	4170596.7	SHIELD-BELT,48IN	1
49	64018-15	BLT-CRG 5/16-18X1	2
50	64268-02	NUT-FL NYLON LOCK 5/16-18	2

ITEM	PART NO.	DESCRIPTION	QTY

*NOT ILLUSTRATED

52" SIDE DECK ASSEMBLY

FIGURE 16

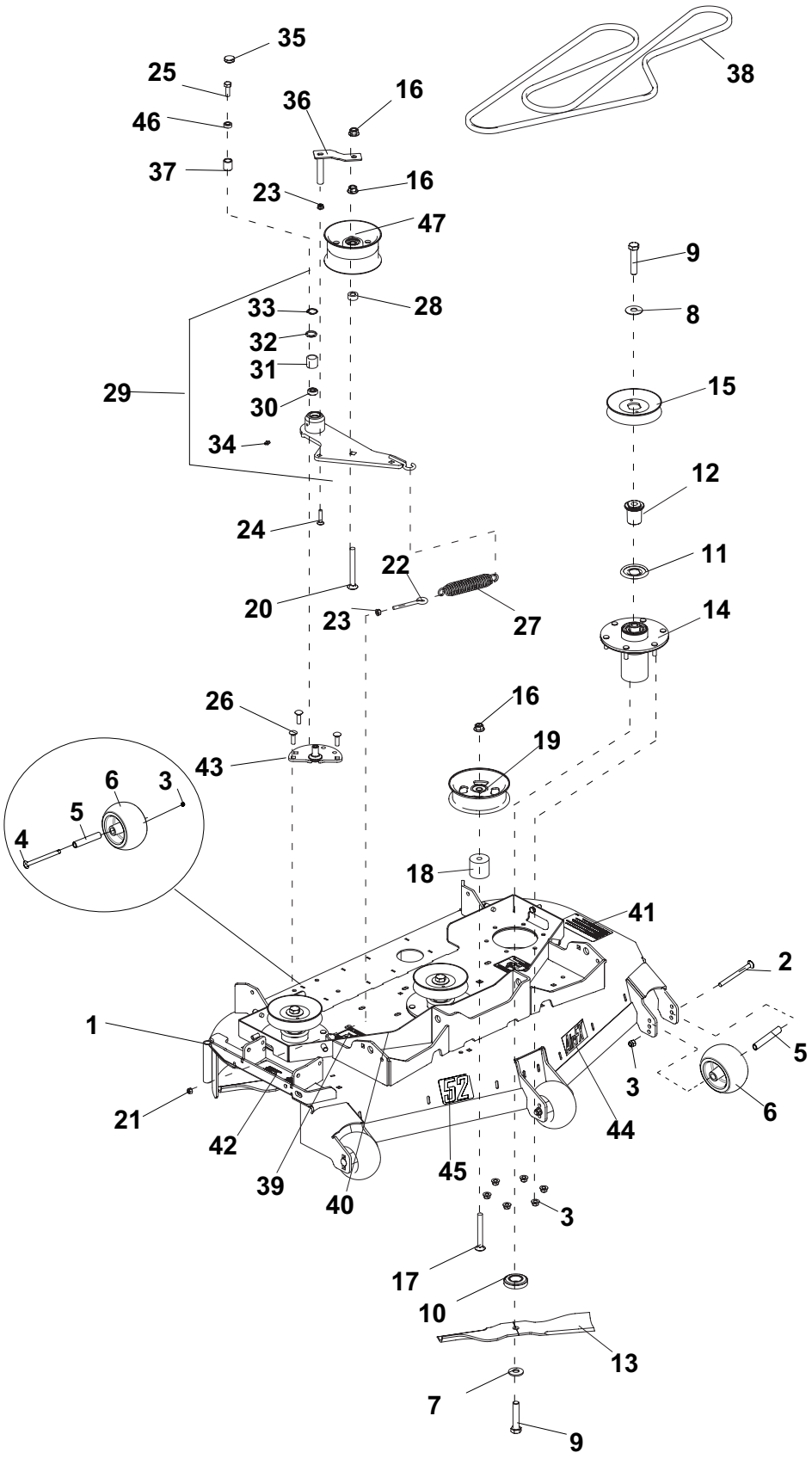

52" SIDE DECK ASSEMBLY

FIGURE 16

ITEM	PART NO.	DESCRIPTION	QTY
1	4178726	S-CUTTERDECK,52IN	1
2	64018-30	BLT-CRG 3/8-16 X 4-1/2	3
3	64268-03	NUT-FL NYLON LOCK 3/8-16	22
4	64123-217	BLT-HEX 3/8-16X4-1/4	1
5	2720685	SPACER-ROLLER	4
6	2721512	ROLLER-5X2.75 CENTERED	4
7	64209-03	SPRING WASHER.67 ID	3
8	64209-16	WSHR-CON SPRING .67 ID	3
9	64123-133	BLT-HEX 5/8-18X3	6
10	4174961-1	SPINDLE-SPACER,BLADE 0.63IN	3
11	4175081	SPINDLE-SPACER, SLINGER	3
12	4175082-6	SPINDLE-SPACER,PULLEY 1.931	3
13	112111-02	BLADE 18.00 OFFST HLFT	3
	112111-02-LE	BLADE 18.00 LAZER EDGE (OPT)	
14	4178252	ASSY-SPINDLE,6 BOLT,30MM	3
15	4174432	PULLEY-SPINDLE, 52IN	3
16	64268-05	NUT-FL NYLON LOCK 1/2-13	3
17	64018-21	BLT-CRG 1/2-13X4	1
18	4152578-04	SPACER-2.0 X .516 X 1.81	1
19	4176312-02	PULLEY-IDLER,5.50"X1.50"W	1
20	64018-33	BLT-CRG 1/2-13 X 4-1/2	1
21	64229-02	NUT-NYLON LOCK 5/16-18	1
22	64158-08	EYE BOLT 5/16-18 X 2.5 THD LG	1
23	64141-6	NUT-WLF 5/16-18	2
24	64018-34	BLT-CRG 5/16-18 X 1-1/2	1
25	64270-02	BLT-HEX M10-1.5x30 ISO CL10.9	1
26	64018-7	BLT-CRG 3/8-16X1-1/4	3
27	4169716	SPRING-EXTENSION	1
28	4163802-04	SPACER-1.0 X .516 X .936	1
29	4177819	ASSY-IDLER ARM	1
	INCLUDES ITEMS 30-34		
30	4128004	BEARING-BALL 10 X 26 X 8	1
31	548138	BRG NDL.88 1.12 1.00 OPEN END	1
32	521438	GREASE SEAL	1
33	64144-40	RING-RET 26MM INT	1
34	85010N	ZERK 1/4-28 STR SELF TAP	1
35	4128002	CAP-26 X 7 END	1
36	4170510.46	WLDMT-IDLER BELT GUIDE	1
37	4163155	INNER RING	1
38	4170484	BELT-52IN DECK	1
39	2000577	LABEL WARNING	3
40	4171408	LABEL-SPRING LENGTH	1
41	2000572	LABEL-WARNING BLADES	1
42	4164269	LABEL-WARNING THROWN OBJTS	1
43	4170021.46	WLDMT-IDLER PIN	1
44	4175433	LABEL-AIRFX	1
45	4162915	LABEL-DECK SIZE, 52	1
46	4163014	SPACER	1
47	4170088	PULLEY-5.25IN OD X 2.5IN W	1

ITEM	PART NO.	DESCRIPTION	QTY

***NOT ILLUSTRATED**

61" SIDE DECK ASSEMBLY

FIGURE 17

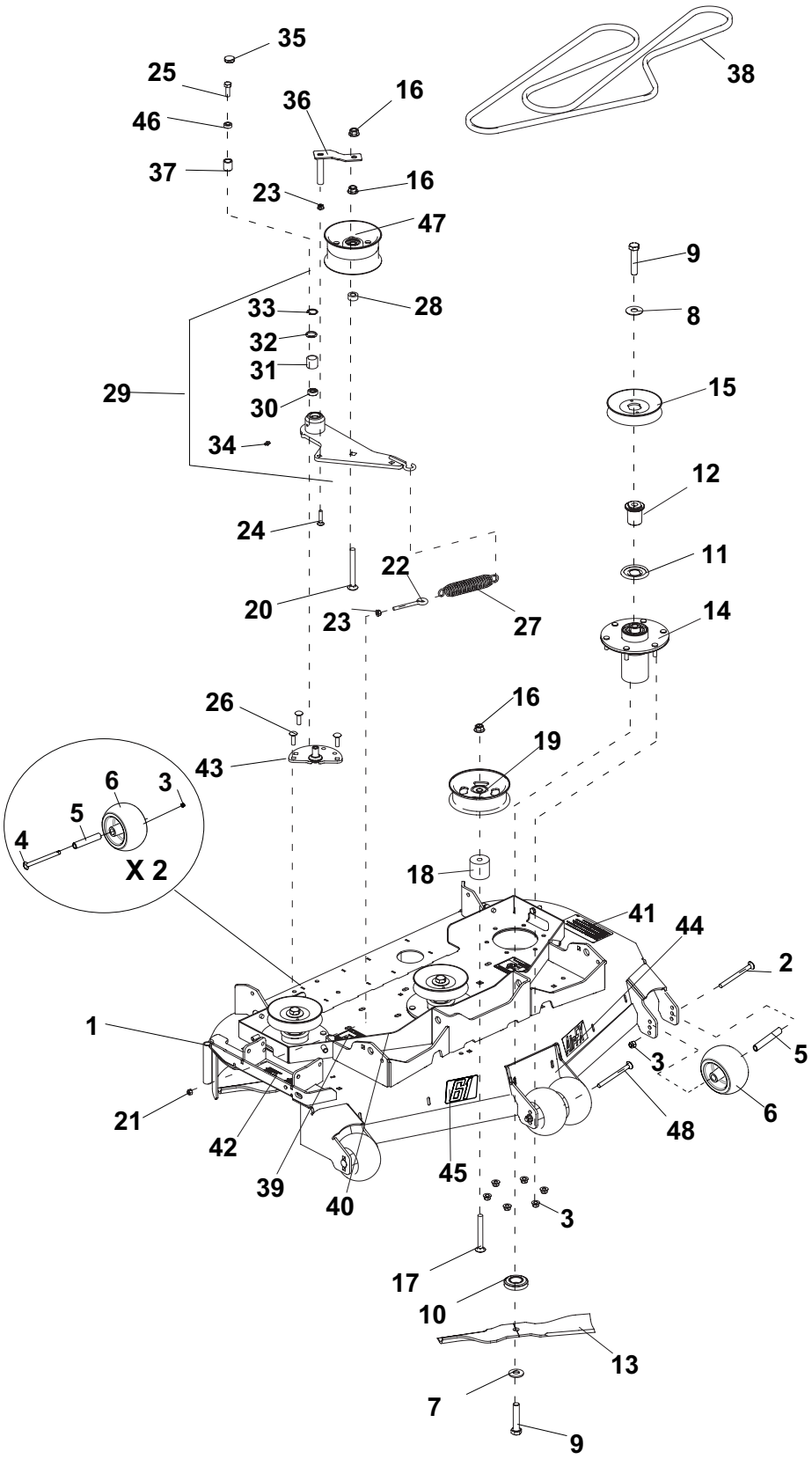

61" SIDE DECK ASSEMBLY

FIGURE 17

ITEM	PART NO.	DESCRIPTION	QTY
1	4178727	S-CUTTERDECK,61IN	1
2	64018-30	BLT-CRG 3/8-16 X 4-1/2	3
3	64268-03	NUT-FL NYLON LOCK 3/8-16	22
4	64123-217	BLT-HEX 3/8-16X4-1/4	2
5	2720685	SPACER-ROLLER	4
6	2721512	ROLLER-5X2.75 CENTERED	6
7	64209-03	SPRING WASHER.67 ID	3
8	64209-16	WSHR-CON SPRING .67 ID	3
9	64123-133	BLT-HEX 5/8-18X3	6
10	4174961-1	SPINDLE-SPACER,BLADE 0.63IN	3
11	4175081	SPINDLE-SPACER, SLINGER	3
12	4175082-6	SPINDLE-SPACER,PULLEY 1.931	3
13	112111-03	BLADE 21.00 OFFST HLFT	3
	112111-03-LE	BLADE 21.00 LAZER EDGE (OPT)	
14	4178252	ASSY-SPINDLE,6 BOLT,30MM	3
15	4173961	PULLEY-SPINDLE, 61IN	3
16	64268-05	NUT-FL NYLON LOCK 1/2-13	3
17	64018-21	BLT-CRG 1/2-13X4	1
18	4152578-04	SPACER-2.0 X .516 X 1.81	1
19	4176312-02	PULLEY-IDLER,5.50"X1.50"W	1
20	64018-33	BLT-CRG 1/2-13 X 4-1/2	1
21	64229-02	NUT-NYLON LOCK 5/16-18	1
22	64158-08	EYE BOLT 5/16-18 X 2.5 THD LG	1
23	64141-6	NUT-WLF 5/16-18	2
24	64018-34	BLT-CRG 5/16-18 X 1-1/2	1
25	64270-02	BLT-HEX M10-1.5x30 ISO CL10.9	1
26	64018-7	BLT-CRG 3/8-16X1-1/4	3
27	4169716	SPRING-EXTENSION	1
28	4163802-04	SPACER-1.0 X .516 X .936	2
29	4177819	ASSY-IDLER ARM	1
	INCLUDES ITEMS 30-34		

ITEM	PART NO.	DESCRIPTION	QTY
30	4128004	BEARING-BALL 10 X 26 X 8	1
31	548138	BRG NDL.88 1.12 1.00 OPEN END	1
32	521438	GREASE SEAL	1
33	64144-40	RING-RET 26MM INT	1
34	85010N	ZERK 1/4-28 STR SELF TAP	1
35	4128002	CAP-26 X 7 END	1
36	4170510.46	WLDMT-IDLER BELT GUIDE	1
37	4163155	INNER RING	1
38	4170952	BELT-61IN DECK	1
39	2000577	LABEL WARNING	3
40	4171408	LABEL-SPRING LENGTH	1
41	2000572	LABEL-WARNING BLADES	1
42	4164269	LABEL-WARNING THROWN OBJTS	1
43	4170021.46	WLDMT-IDLER PIN	1
44	4175433	LABEL-AIRFX	1
45	4162916	LABEL-DECK SIZE,61	1
46	4163014	SPACER	1
47	4170088	PULLEY-5.25IN OD X 2.5IN W	1
48	64018-61	BLT-CRG 3/8-16X8 G5	1
49*	4176480	SPACER-ROLLER,.63X12X6.795 MIDDLE FRONT ROLLERS	1

***NOT ILLUSTRATED**

CHUTE, BAFFLES & EDGES ASSY

FIGURE 18

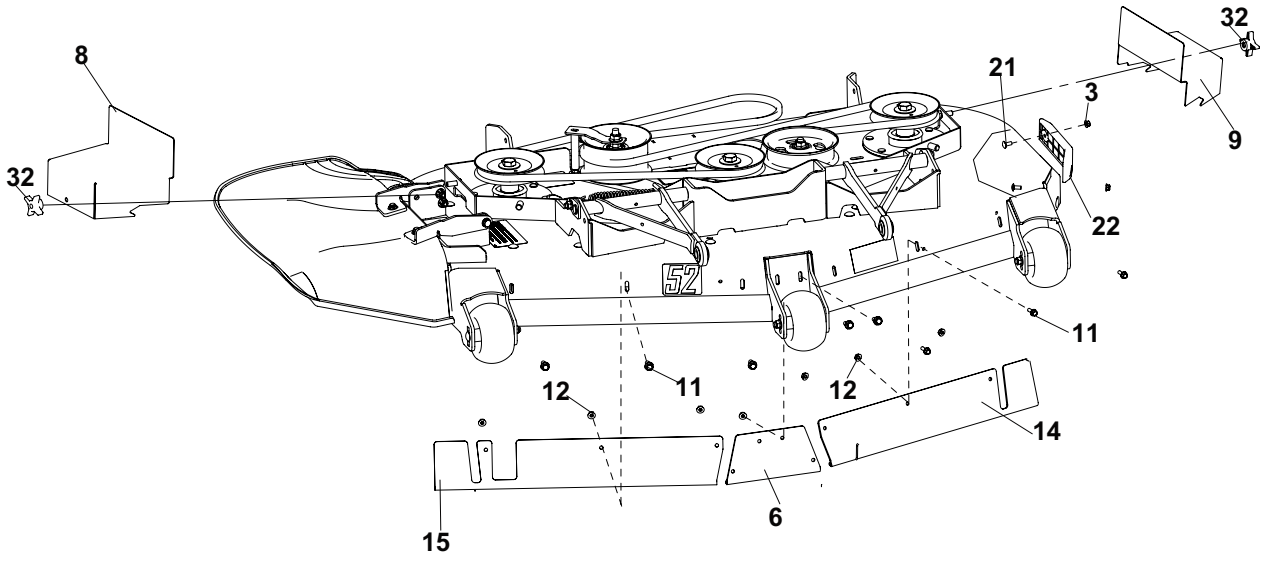

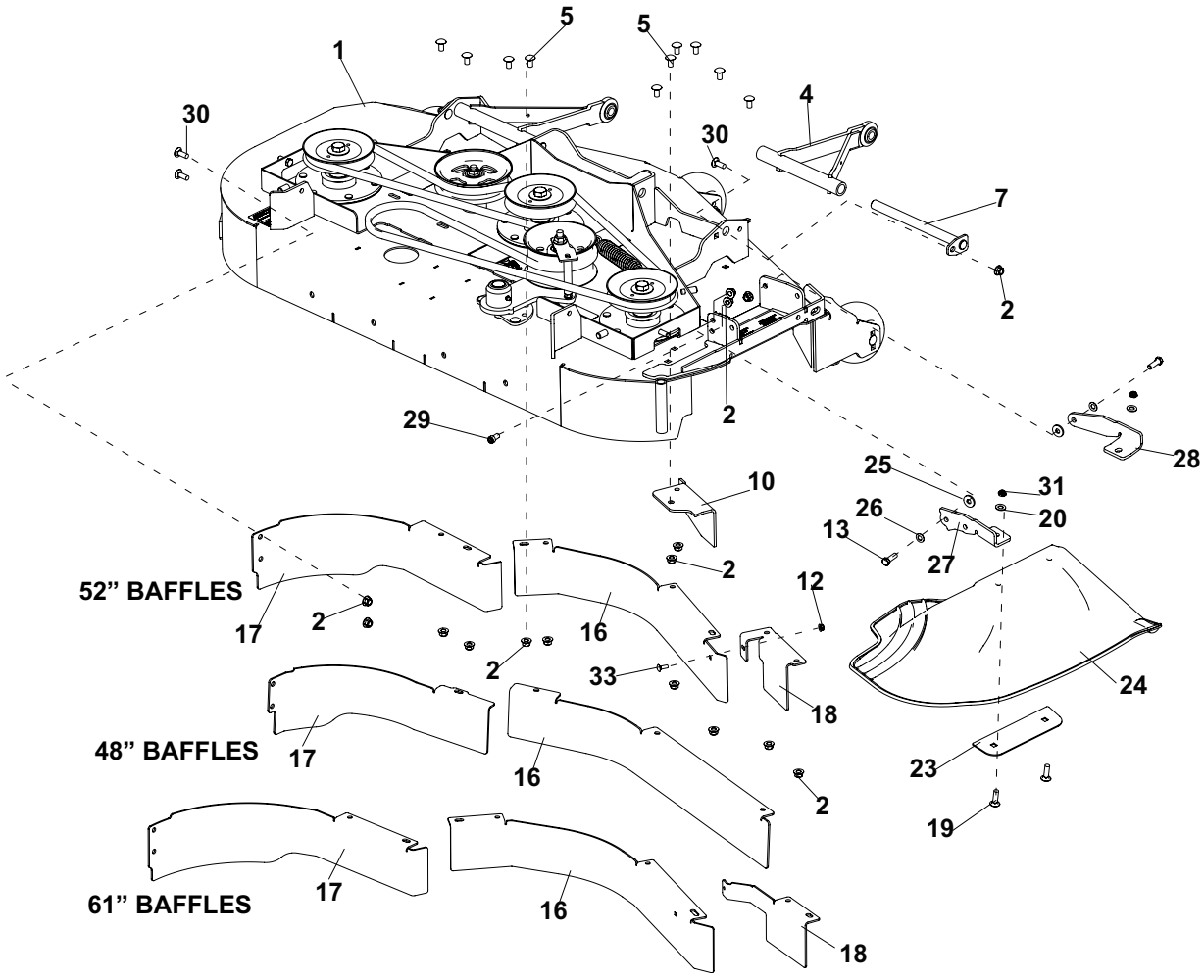

CHUTE, BAFFLES & EDGES ASSY

FIGURE 18

ITEM	PART NO.	DESCRIPTION	QTY
1	4178725	S-CUTTERDECK 48 W/LBLS	1
	4178726	S-CUTTERDECK 52 W/LBLS	1
	4178427	S-CUTTERDECK 61 W/LBLS	1
2	64268-03	NUT-FL NYLON LOCK 3/8-16	17
3	64268-02	NUT-FL NYLON LOCK 5/16-18	2
4	4177839.46	WLDMT-PULLARM	2
5	64018-23	BLT-CRG 3/8-16X3/4 SN	
	QTY 10 IN 48 & 52		
	QTY 11 IN 61		
6	4176623.46	EXTENSION-DECK,CNTR 48/52	1
	4176626.46	EXTENSION-DECK CNTR 61	1
7	4177840	WLDMT-PULLARM SHAFT	2
8	4178493.46	COVER-BELT, 48 RH	1
	4178495.46	COVER-BELT, 52 RH	1
	4178399.46	COVER-BELT, 61 RH	1
9	4178492.46	COVER-BELT, 48 LH	1
	4178494.46	COVER-BELT, 52 LH	1
	4178399.46	COVER-BELT, 61 LH	1
10	4174764.46	BAFFLE-DISCHARGE 48	1
	4176481.46	BAFFLE-DISCHARGE,52	1
	4175129.46	BAFFLE-DISCHARGE 61	1
11	64262-002	BLT-FLG HD 1/4-20 X 3/4	8
12	64268-01	NUT-FL NYLON LOCK 1/4-20	9
13	64123-16	BLT-HEX 3/8-16X1-1/4	2
14	4174533.46	EXTENSION-48 DECK, LH	1
	4176621.46	EXTENSION-52 DECK, LH	1
	4176625.46	EXTENSION-61 DECK, LH	1
15	4174534.46	EXTENSION-DECK,48IN RH	1
	4176622.46	EXTENSION-DECK,52IN RH	1
	4176625.46	EXTENSION-DECK 61IN RH	1
16	4175173.46	BAFFLE,-FRONT,CNTR 48	1
	4174324.46	BAFFLE-FRONT, CNTR 52	1
	4175509.46	BAFFLE-FRONT, CNTR 61	1
17	4174533.46	BAFFLE-FRONT, LH 48	1
	4174323.46	BAFFLE-FRONT, LH 52	1
	4173344.46	BAFFLE-FRONT, LH 61	1
18	4174325.46	BAFFLE-FRONT, RH 52	1
	4173346.46	BAFFLE-FRONT, RH 61	1
19	64018-7	BLT-CRG 3/8-16X1-1/4	2
20	64163-61	WSHR .81X.406X16GA	2
21	64018-9	BLT-CRG 5/16-18X3/4 G5	2
22	4172339	PAD-WEAR, TRIM SIDE	1
23	4173063.46	PLATE-CHUTE	1
24	4172328	CHUTE-DISCHARGE	1
25	4169895	WASHER-FRICTION, UHMW	2
26	4169871	WASHER-BELLVILLE, .382 ID	2
27	4179018.46	BRKT-CHUTE REAR	1
28	4174544.46	BRKT-CHUTE FRONT	1
29	64189-28	BLT-HEX SOC, 3/8-16X3/4	1
30	64018-44	BLT-CRG 3/8-16X1 SN	6
31	64151-34	NUT-HEX LOCK, 3/8-16 JAM	2
32	38524	KNOB-4 PRONG 3/8-16	2
33	64018-2	BLT-CRG 1/4-20X3/4	1
		USED ON 52" & 61	

Bobcat® and the Bobcat logo are trademarks of Bobcat Company in the United States and various other countries.

BOBCAT COMPANY
ONE BOBCAT LANE
P.O. BOX 469
JOHNSON CREEK, WI 53038
920-699-2000
www.Bobcat.com